TECHNO MODULE

MODULAR ELSTEEL ENCLOSURES

www.elsteel.com

The best technical solution at the best possible price

This is a **“WHAT YOU SEE IS WHAT YOU GET”** catalogue.
Order information on the left page and
assembly instructions and spare parts on the right.

Welcome to the world’s best 100% three dimensional, 25mm modular system!
We also make the world’s best mounting boxes - terminal boxes - special enclosures
and 19” systems. Please ask us for a separate brochure!

Log in to www.elsteel.com and stay updated!

You´re holding a top of the line
quality product in your hands.
Made with love and excellence!
I hope you will enjoy assembling and
using Elsteel products as much as
I enjoy manufacturing it for you.

Fang Logstrup
Managing Director

TECHNO MODULE 1

BUSBAR SYSTEMS 2

FIXED TYPE INSERTS 3

TECH.SPEC / SPARE PARTS 4

Due to continued R&D, technical details may be subject to change.
All dimensions are given in mm.

© 1997-2024 ELSTEEL. All Right Reserved

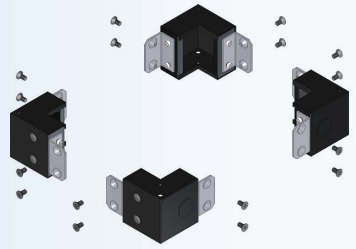

PLINTH CORNERS

CAT. No.	DESCRIPTION	CORNER SIZE	WEIGHT (kg)	ORDER NO. RAL 9005 SMF.
UBFC	PLINTH CORNERS	100X100	4.50	U10000

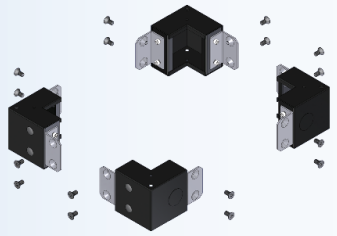

ADJUSTABLE PLINTH CORNERS

CAT. No.	DESCRIPTION	CORNER SIZE	WEIGHT (kg)	ORDER NO. RAL 9005 SMF.
UABFC	ADJUSTABLE PLINTH CORNERS	100X100	8.60	U10005

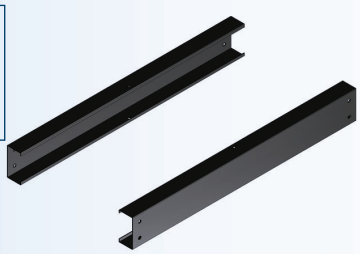

PLINTH PROFILES

CAT. No.	DESCRIPTION	PROFILE LENGTH	PANEL SIZE	WEIGHT (kg)	ORDER NO. RAL 9005 SMF.
UBPP 3	PLINTH PROFILES	100	300	0.63	U10030
UBPP 4	PLINTH PROFILES	200	400	1.31	U10040
UBPP 6	PLINTH PROFILES	400	600	2.56	U10050
UBPP 8	PLINTH PROFILES	600	800	3.83	U10060
UBPP 10	PLINTH PROFILES	800	1000	5.26	U10070
UBPP 12	PLINTH PROFILES	1000	1200	6.54	U10080
UBPP 14	PLINTH PROFILES	1200	1400	7.83	U10090
UBPP 16	PLINTH PROFILES	1400	1600	9.39	U10100
UBPP 18	PLINTH PROFILES	1600	1800	10.46	U10110
UBPP 20	PLINTH PROFILES	1800	2000	11.74	U10120
UBPP 22	PLINTH PROFILES	2000	2200	13.39	U10121
UBPP 24	PLINTH PROFILES	2200	2400	14.19	U10122

BRS 50 brackets included in 800 and above profile length.

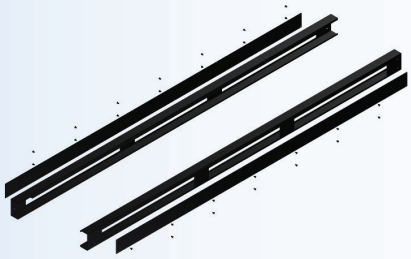

MOVEABLE PLINTH PROFILES

CAT. No.	DESCRIPTION	PROFILE LENGTH	PANEL SIZE	WEIGHT (kg)	ORDER NO. RAL 9005 SMF.
UMBPP 8	MOVEABLE PLINTH PROFILES	600	800	5.78	U10062
UMBPP 10	MOVEABLE PLINTH PROFILES	800	1000	7.22	U10072
UMBPP 12	MOVEABLE PLINTH PROFILES	1000	1200	8.56	U10082
UMBPP 14	MOVEABLE PLINTH PROFILES	1200	1400	10.01	U10092
UMBPP 16	MOVEABLE PLINTH PROFILES	1400	1600	11.45	U10102
UMBPP 18	MOVEABLE PLINTH PROFILES	1600	1800	12.89	U10112
UMBPP 20	MOVEABLE PLINTH PROFILES	1800	2000	14.33	U10123
UMBPP 22	MOVEABLE PLINTH PROFILES	2000	2200	15.72	U10124
UMBPP 24	MOVEABLE PLINTH PROFILES	2200	2400	17.34	U10125

Plinth Corners

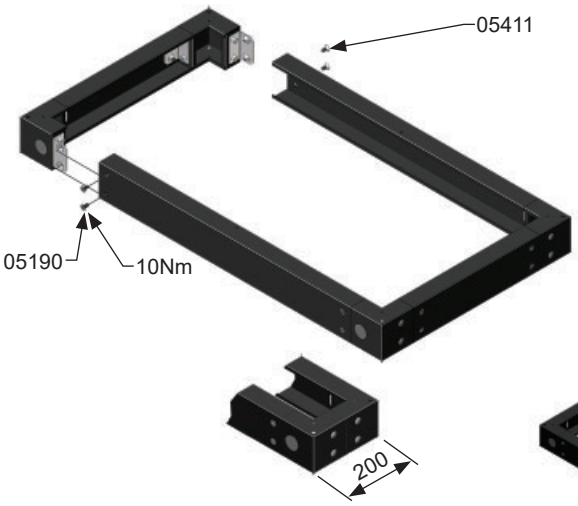

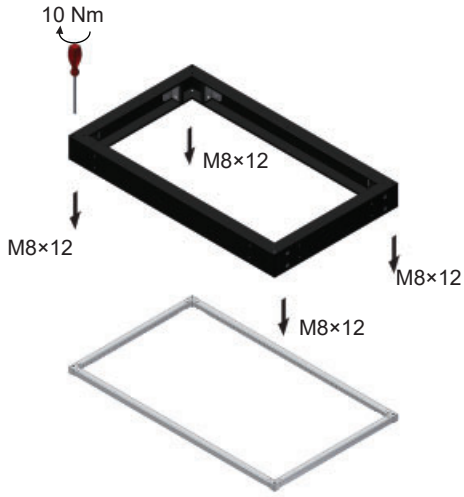

Adjustable Plinth Corners

Maximum load per corner is 600kg

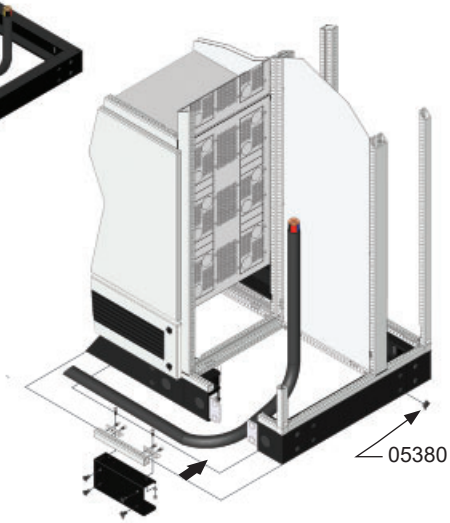

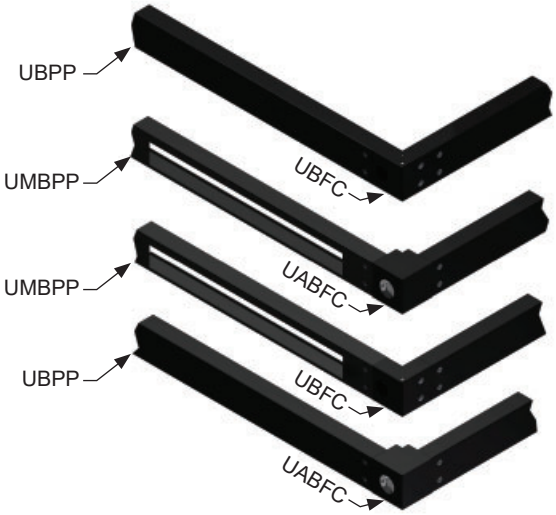

Panels with busbar system over 2300kg require heavy-duty plinth (See page no.1:05 or 1:07)

Maximum weight 1800kg for panel width maximum 2000mm

Maximum weight 1500kg for panel width maximum 2400mm

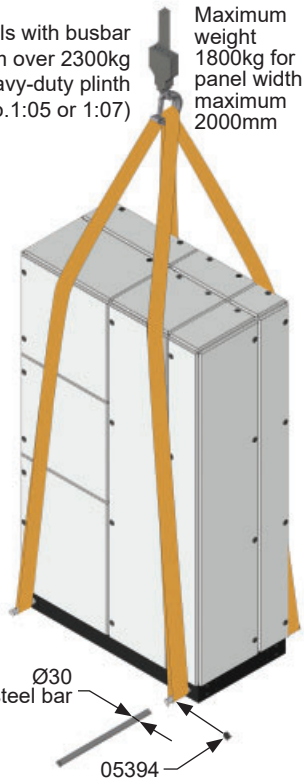

Note (for **BFC** only):
* The floor or the base must be levelled horizontally with the maximum deviation of ±1 mm per 1 meter of length, but no more than ±3 mm for the length of Switchgear.

© 1997-2024 ELSTEEL. All Right Reserved

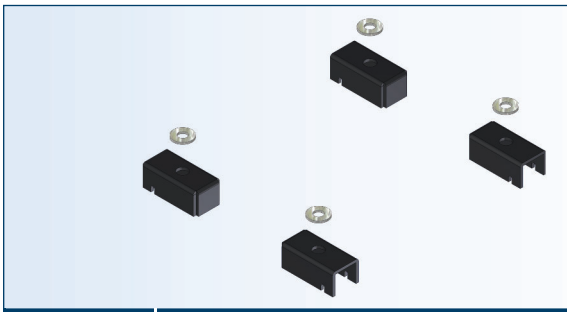

CLAMPING BRACKETS (INTERNAL FIXING)

CAT. No.	DESCRIPTION	WEIGHT (kg)	ORDER NO. RAL 9005 SMF.
UBCB	CLAMPING BRACKETS	0.46	U10150

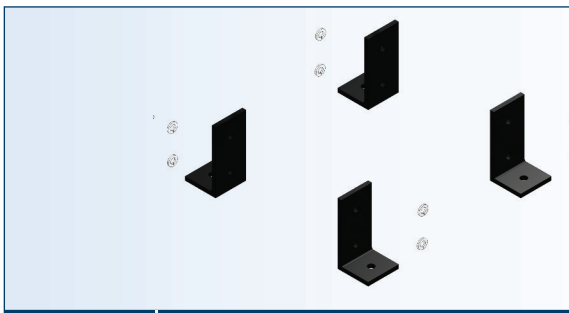

CLAMPING ANGLES (EXTERNAL FIXING)

CAT. No.	DESCRIPTION	WEIGHT (kg)	ORDER NO. RAL 9005 SMF.
UPCA	CLAMPING ANGLES	1.35	U10153

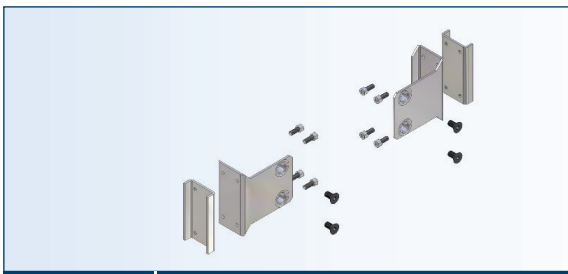

PLINTH FRAME SUPPORTING BRACKETS

CAT. No.	DESCRIPTION	WEIGHT (kg)	ORDER NO.
UPFSB	PLINTH FRAME SUPPORTING BRACKETS	1.79	U10156

Plinth Installation

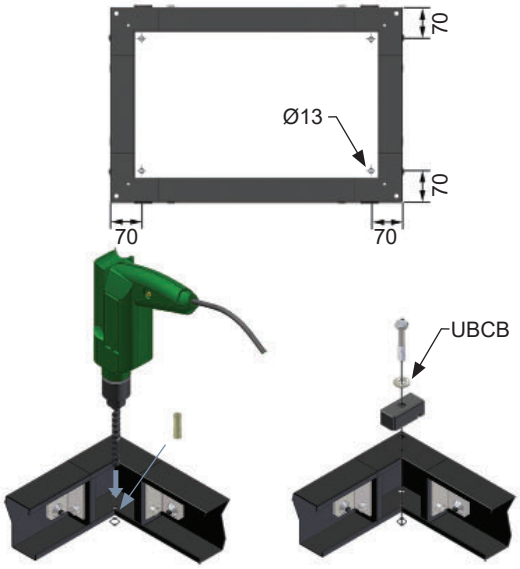

Clamping Bracket (Internal Fixing)

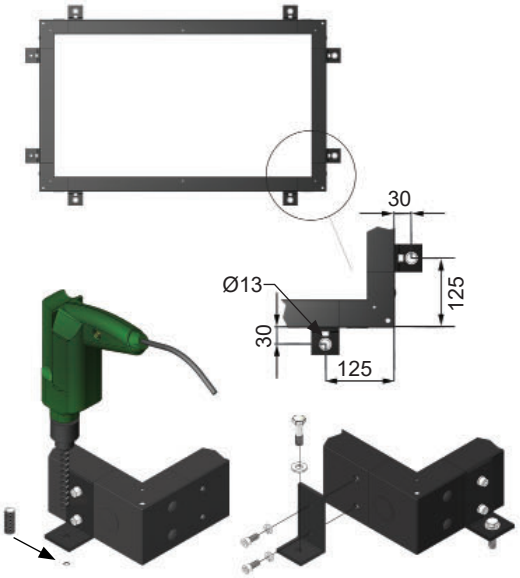

Clamping Angle (External Fixing)

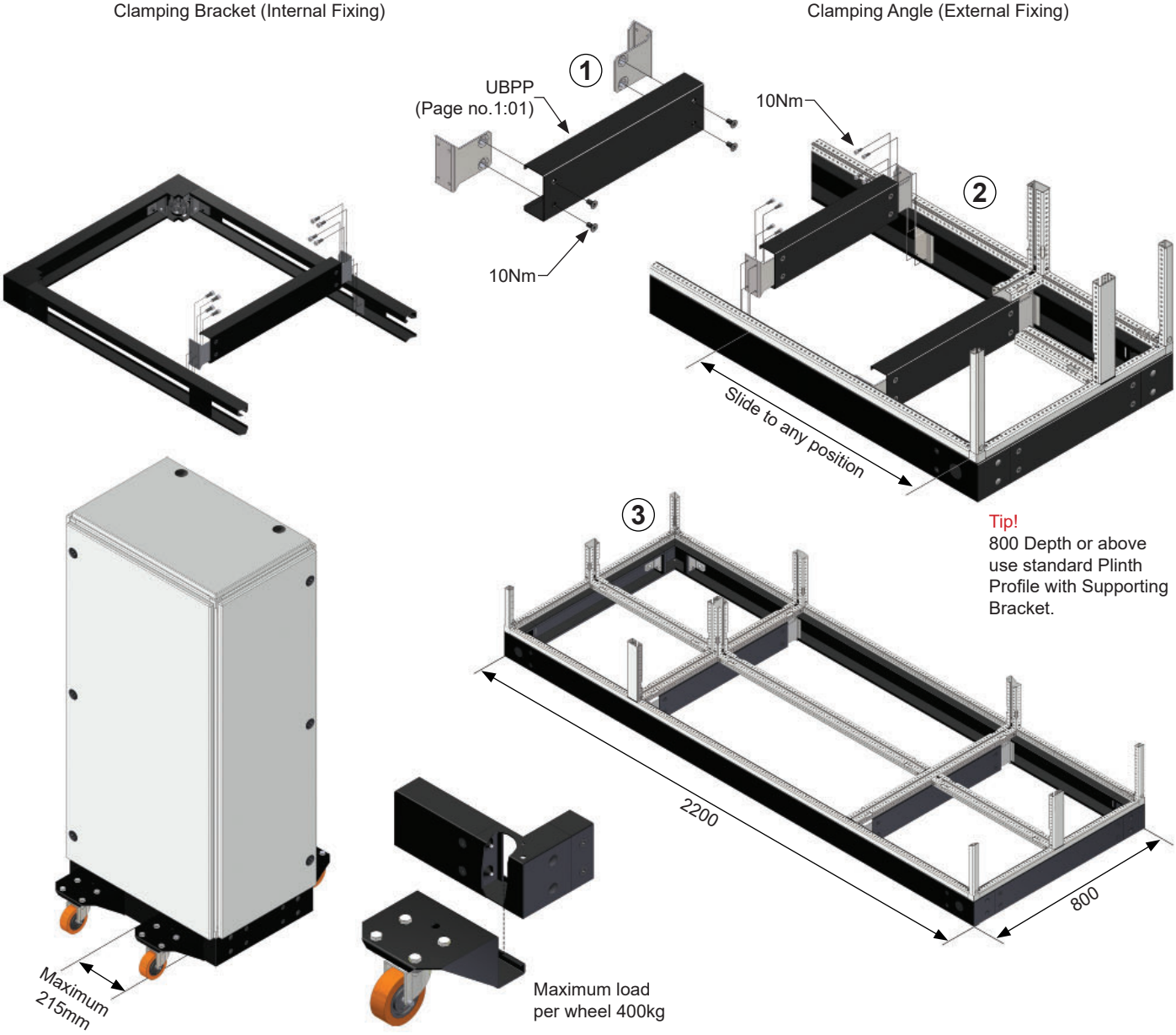

Tip!
800 Depth or above use standard Plinth Profile with Supporting Bracket.

© 1997-2024 ELSTEEL. All Right Reserved

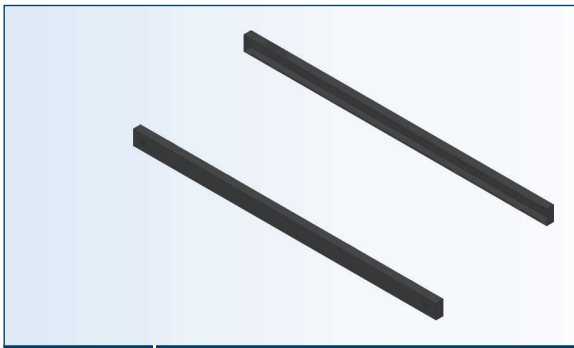

HEAVY-DUTY PLINTH WIDTH PROFILES

CAT. No.	DESCRIPTION	PROFILE LENGTH	PANEL SIZE	WEIGHT (kg)	ORDER NO.
UHPPW 4	HEAVY-DUTY PLINTH WIDTH PROFILES	400	400	4.0	U10160
UHPPW 6	HEAVY-DUTY PLINTH WIDTH PROFILES	600	600	5.9	U10161
UHPPW 8	HEAVY-DUTY PLINTH WIDTH PROFILES	800	800	7.9	U10162
UHPPW 10	HEAVY-DUTY PLINTH WIDTH PROFILES	1000	1000	9.9	U10163
UHPPW 12	HEAVY-DUTY PLINTH WIDTH PROFILES	1200	1200	11.9	U10164
UHPPW 14	HEAVY-DUTY PLINTH WIDTH PROFILES	1400	1400	13.9	U10165
UHPPW 16	HEAVY-DUTY PLINTH WIDTH PROFILES	1600	1600	15.8	U10166
UHPPW 18	HEAVY-DUTY PLINTH WIDTH PROFILES	1800	1800	17.8	U10167
UHPPW 20	HEAVY-DUTY PLINTH WIDTH PROFILES	2000	2000	19.8	U10168

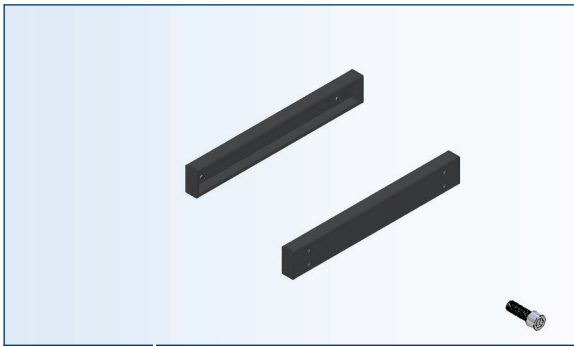

HEAVY-DUTY PLINTH DEPTH PROFILES

CAT. No.	DESCRIPTION	PROFILE LENGTH	PANEL SIZE	WEIGHT (kg)	ORDER NO.
UHPPD 3	HEAVY-DUTY PLINTH DEPTH PROFILES	300	400	3.5	U10175
UHPPD 5	HEAVY-DUTY PLINTH DEPTH PROFILES	500	600	5.2	U10176
UHPPD 7	HEAVY-DUTY PLINTH DEPTH PROFILES	700	800	6.9	U10177
UHPPD 9	HEAVY-DUTY PLINTH DEPTH PROFILES	900	1000	8.6	U10178
UHPPD 11	HEAVY-DUTY PLINTH DEPTH PROFILES	1100	1200	10.4	U10179

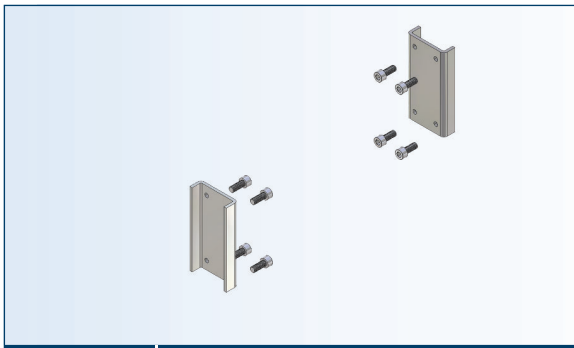

HEAVY-DUTY PLINTH FRAME SUPPORTING BRACKETS

CAT. No.	DESCRIPTION	WEIGHT (kg)	ORDER NO.
UHPFSB	HEAVY-DUTY PLINTH FRAME SUPPORTING BRACKETS	0.334	U10158

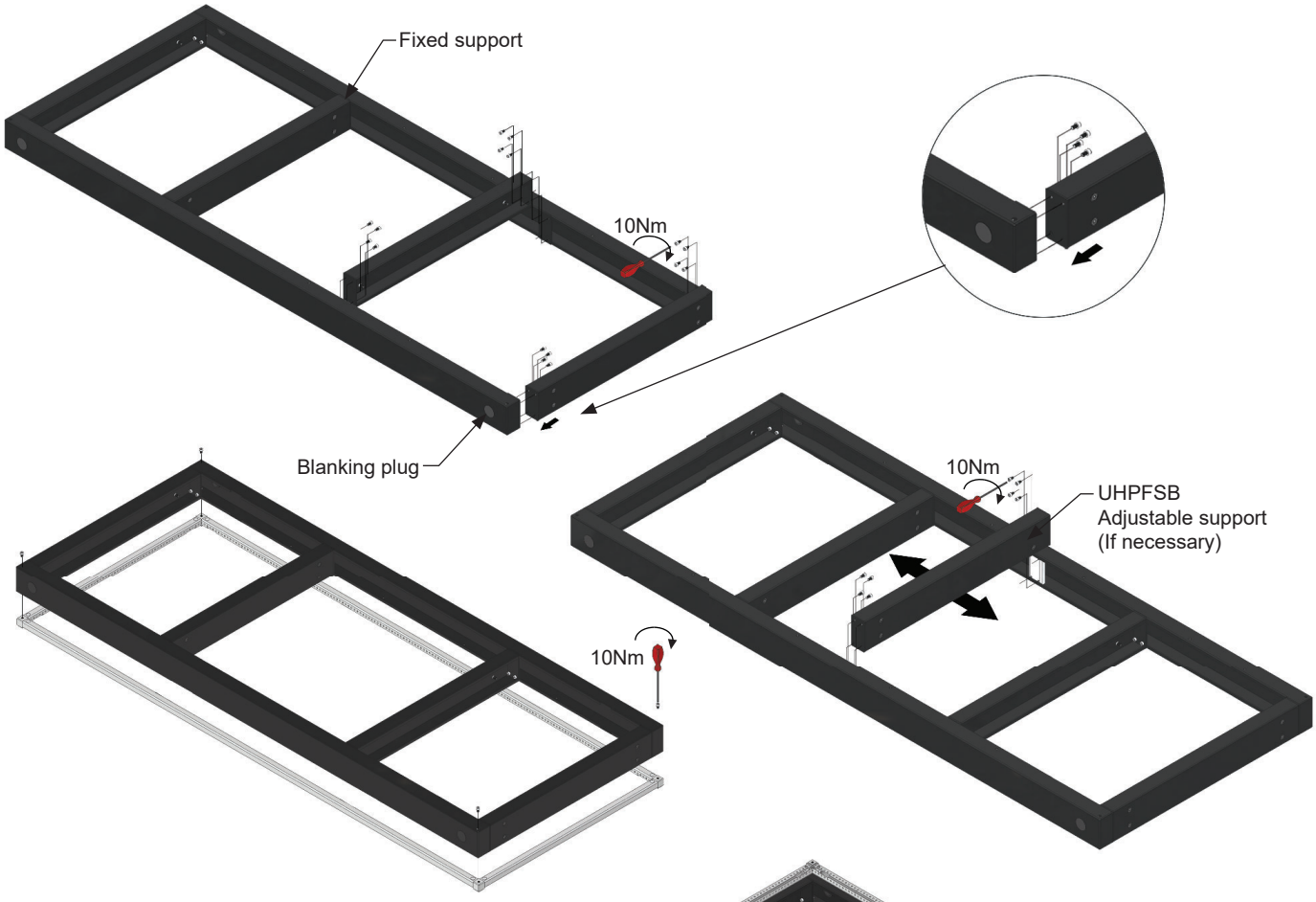

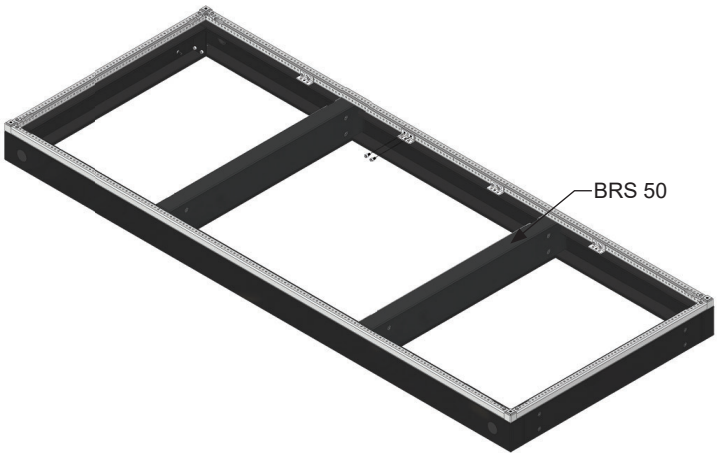

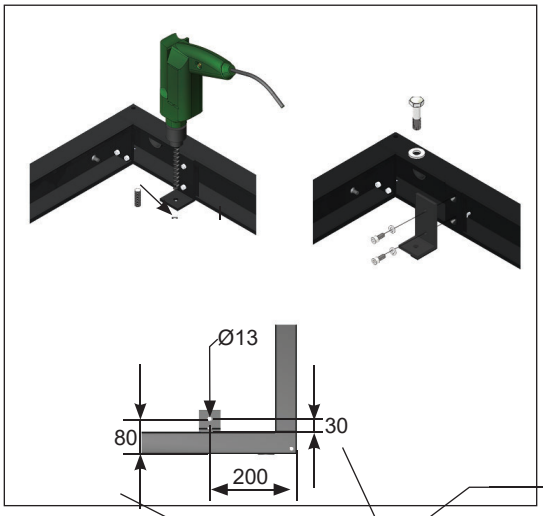

Panels with busbar system over 1800kg
require heavy-duty plinth

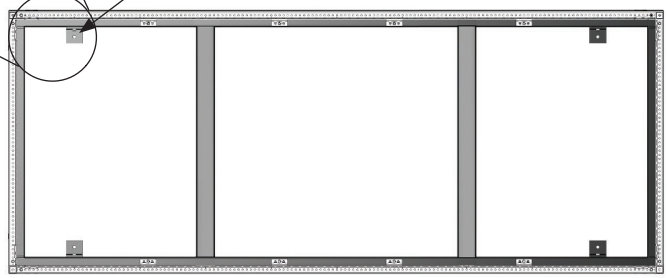

© 1997-2024 ELSTEEL. All Right Reserved

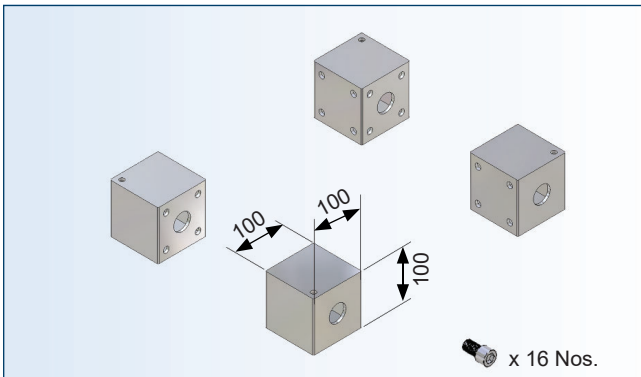

HEAVY-DUTY PLINTH CORNERS
HOT DIP GALVANIZED

CAT. No.	DESCRIPTION	CORNER SIZE	WEIGHT (kg)	ORDER NO.
UHPC	HEAVY -DUTY PLINTH CORNERS	100 X 100	6.09	U10022

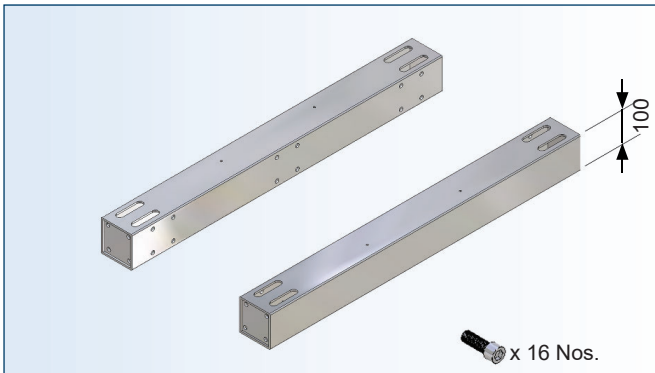

HEAVY-DUTY PLINTH PROFILES
HOT DIP GALVANIZED

CAT. No.	DESCRIPTION	PROFILE LENGTH	PANEL SIZE	WEIGHT (kg)	ORDER NO.
UHPP 4	HEAVY-DUTY PLINTH PROFILES	200	400	6.00	U10131
UHPP 6	HEAVY-DUTY PLINTH PROFILES	400	600	12.02	U10133
UHPP 8	HEAVY-DUTY PLINTH PROFILES	600	800	18.40	U10135
UHPP 10	HEAVY-DUTY PLINTH PROFILES	800	1000	22.46	U10137
UHPP 12	HEAVY-DUTY PLINTH PROFILES	1000	1200	28.05	U10139
UHPP 14	HEAVY-DUTY PLINTH PROFILES	1200	1400	32.00	U10141
UHPP 16	HEAVY-DUTY PLINTH PROFILES	1400	1600	40.02	U10143
UHPP 18	HEAVY-DUTY PLINTH PROFILES	1600	1800	43.00	U10145
UHPP 20	HEAVY-DUTY PLINTH PROFILES	1800	2000	50.08	U10146
UHPP 22	HEAVY-DUTY PLINTH PROFILES	2000	2200	57.16	U10147

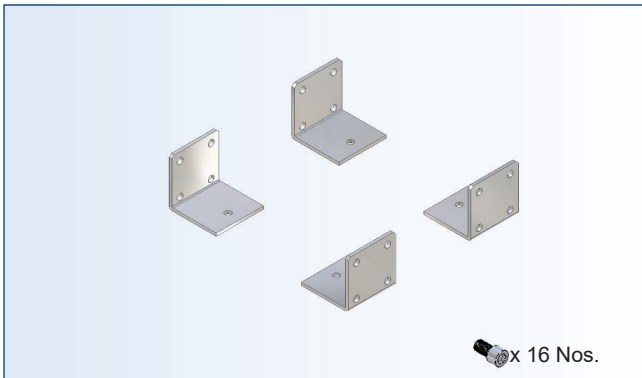

HEAVY-DUTY CLAMPING ANGLES
HOT DIP GALVANIZED

CAT. No.	DESCRIPTION	WEIGHT (kg)	ORDER NO.
UHCB	HEAVY-DUTY CLAMPING ANGLES	3.01	U10155

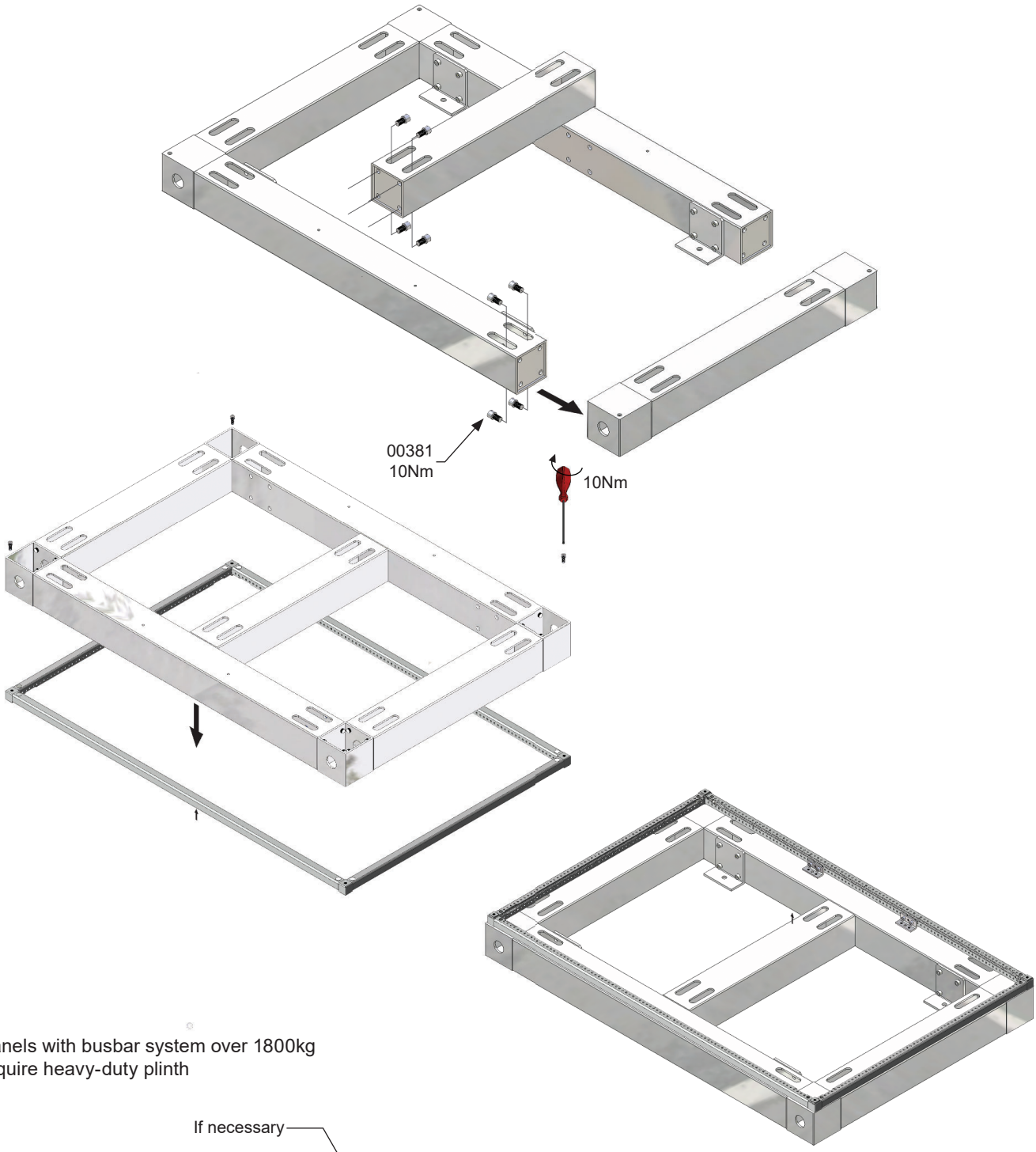

Panels with busbar system over 1800kg
require heavy-duty plinth

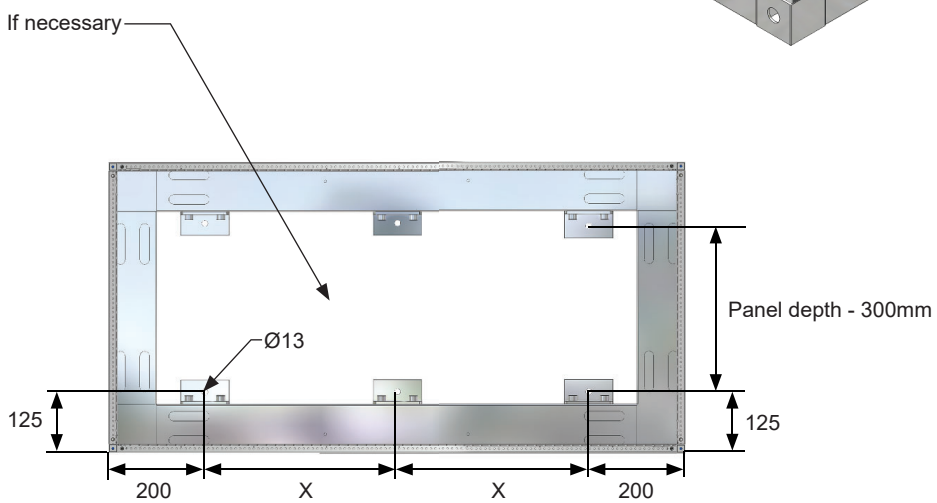

X = Multiple of 200 (Ex. 400,600,800,1000)

© 1997-2024 ELSTEEL. All Right Reserved

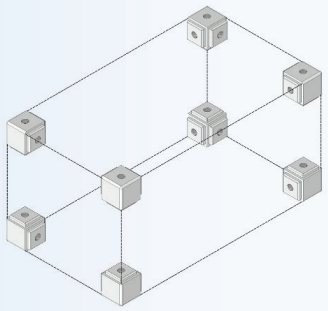

CORNERS

CAT. No.	DESCRIPTION	WEIGHT (kg)	ORDER NO. Aluminium	ORDER NO. RAL 7035 FTF.
UCRS	CORNERS	0.38	U10186	U10184

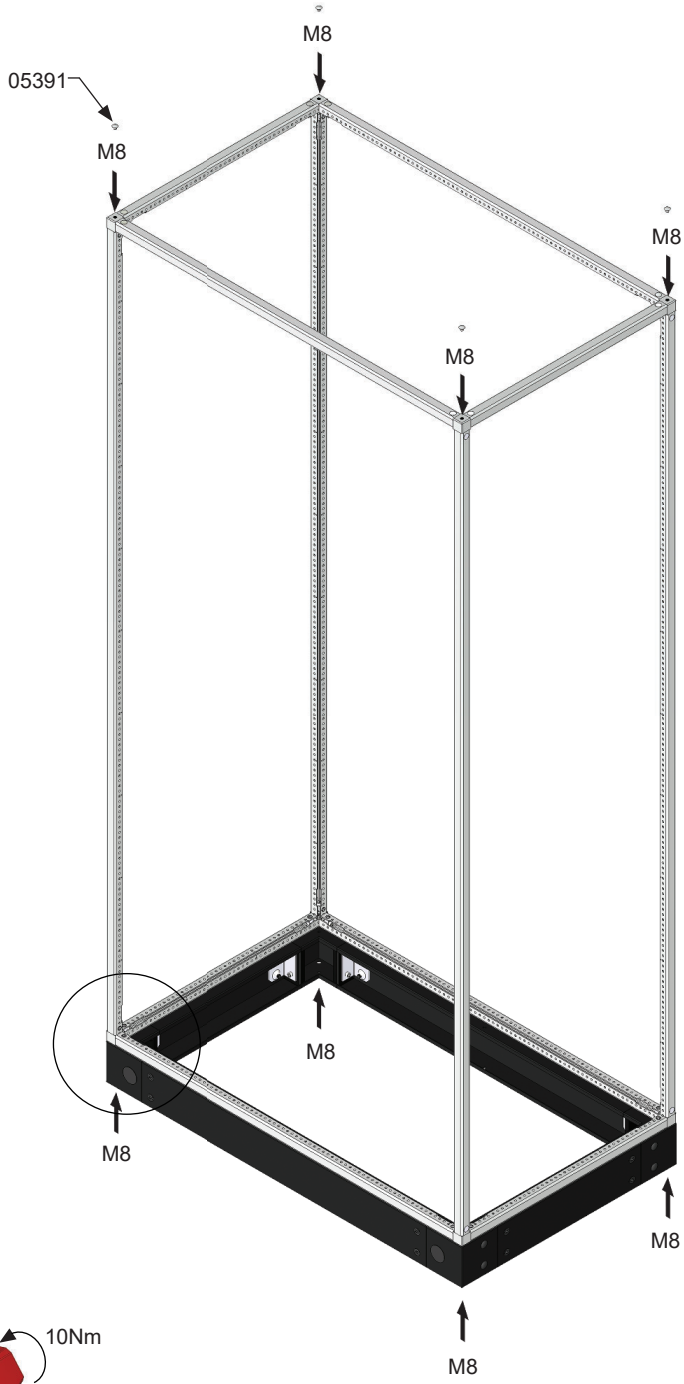

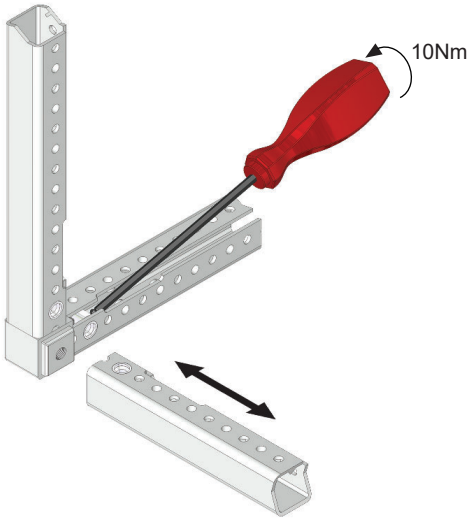

© 1997-2024 ELSTEEL. All Right Reserved

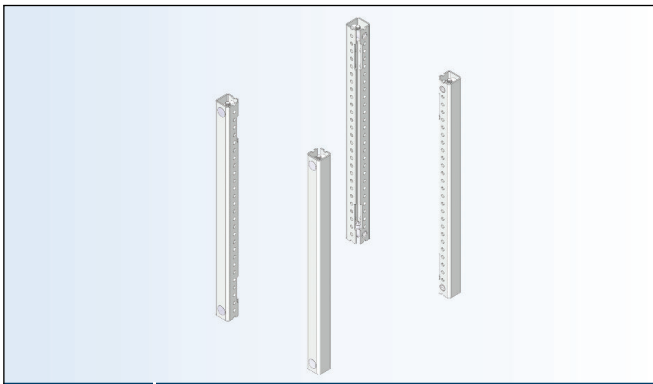

CORNER BARS

CAT. No.	DESCRIPTION		WEIGHT (kg)	ORDER NO. Alu Zinc	ORDER No. RAL 7035 FTF.
UCB 2	CORNER BARS	200	0.94	U10216	U10214
UCB 3	CORNER BARS	300	1.42	U10226	U10224
UCB 4	CORNER BARS	400	1.88	U10236	U10234
UCB 6	CORNER BARS	600	2.78	U10246	U10244
UCB 8	CORNER BARS	800	3.08	U10256	U10254
UCB 10	CORNER BARS	1000	4.64	U10266	U10264
UCB 12	CORNER BARS	1200	5.56	U10276	U10274
UCB 14	CORNER BARS	1400	6.05	U10286	U10284
UCB 16	CORNER BARS	1600	7.38	U10296	U10294
UCB 18	CORNER BARS	1800	8.46	U10306	U10304
UCB 20	CORNER BARS	2000	9.54	U10316	U10314
UCB 22	CORNER BARS	2200	10.40	U10326	U10324
UCB 24	CORNER BARS	2400	11.28	U10336	U10334

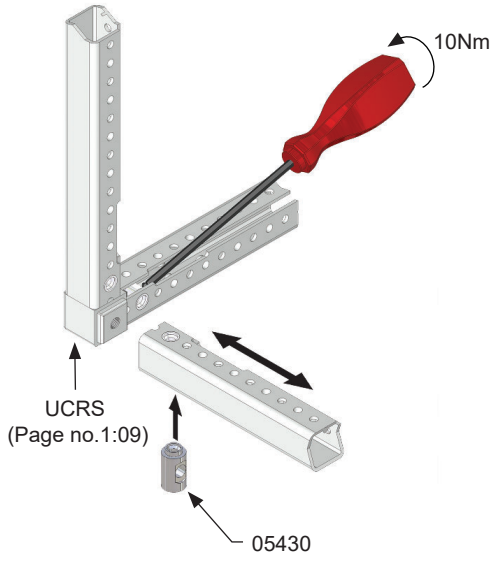

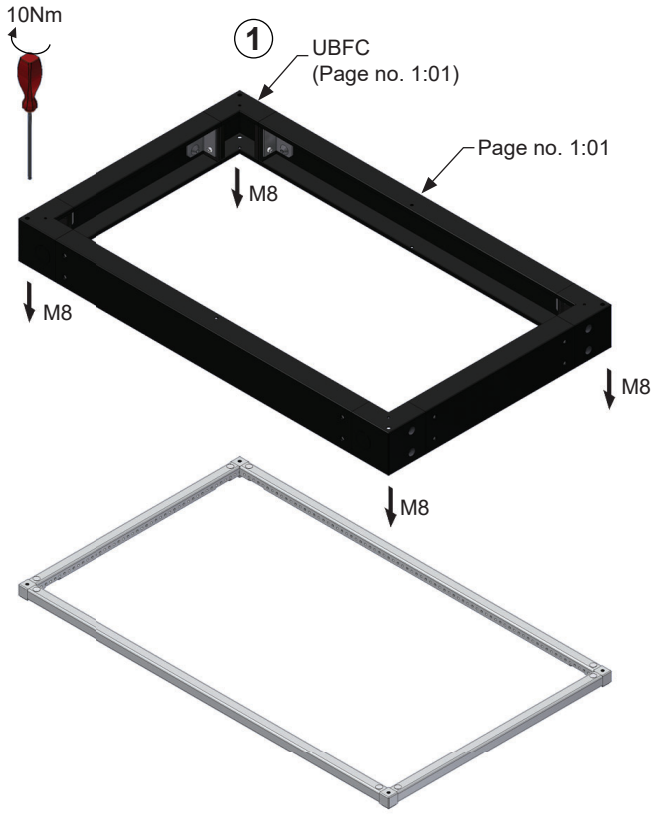

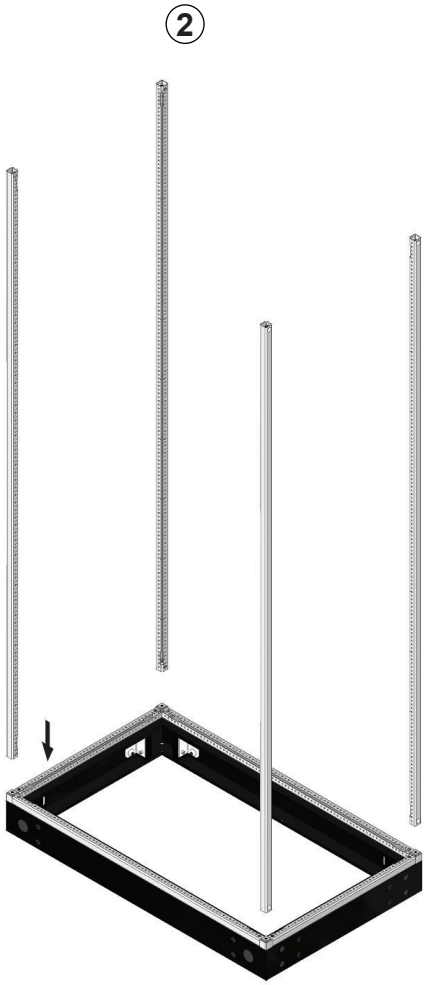

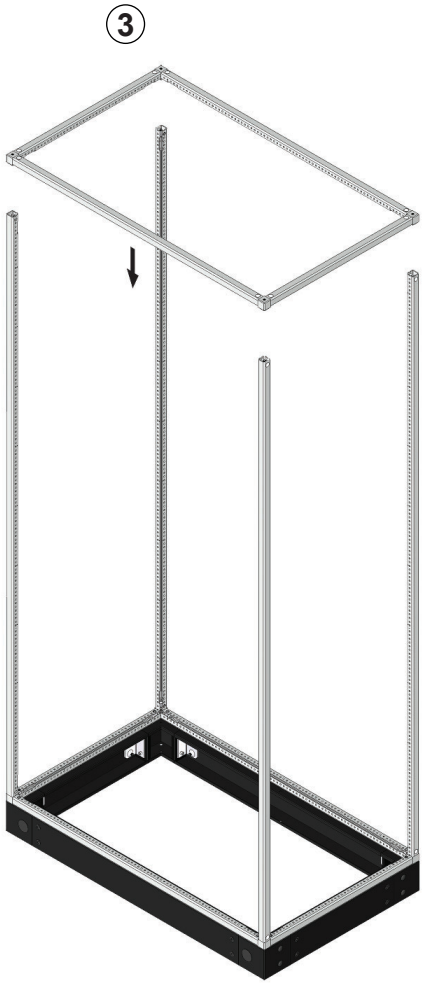

© 1997-2024 ELSTEEL. All Right Reserved

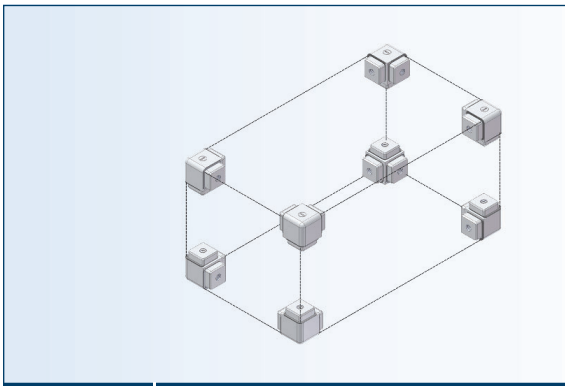

CORNERS
VERSION 2

TYPE	DESCRIPTION	WEIGHT (kg)	VERSION 2 ORDER NO. RAL 7035 FTF.
UCRS	CORNERS	0.38	U16584

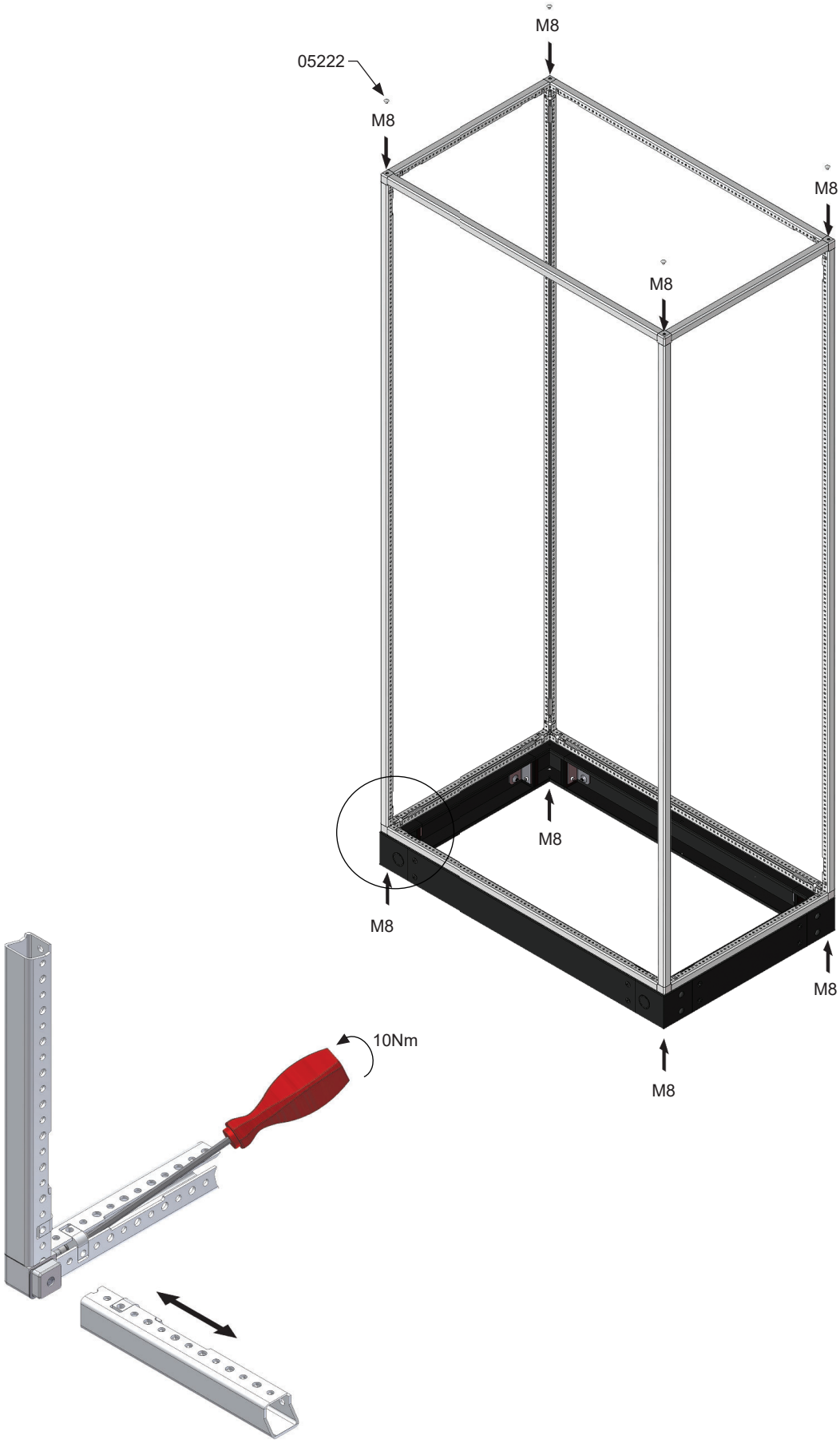

Version 2 Corners must be assembled with Version 2 Corner Bars.

© 1997-2024 ELSTEEL. All Right Reserved

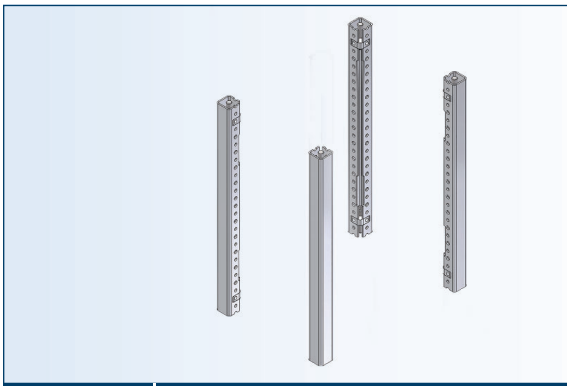

CORNER BARS
VERSION 2

TYPE	DESCRIPTION	PANEL SIZE	WEIGHT (kg)	VERSION 2 ORDER NO. RAL 7035 FTF.
UCB 2	CORNER BARS	200	0.94	U16614
UCB 3	CORNER BARS	300	1.42	U16624
UCB 4	CORNER BARS	400	1.88	U16634
UCB 6	CORNER BARS	600	2.78	U16644
UCB 8	CORNER BARS	800	3.08	U16654
UCB 10	CORNER BARS	1000	4.64	U16664
UCB 12	CORNER BARS	1200	5.56	U16674
UCB 14	CORNER BARS	1400	6.05	U16684
UCB 16	CORNER BARS	1600	7.38	U16694
UCB 18	CORNER BARS	1800	8.46	U16704
UCB 20	CORNER BARS	2000	9.54	U16714
UCB 22	CORNER BARS	2200	10.40	U16724
UCB 24	CORNER BARS	2400	11.28	U16734

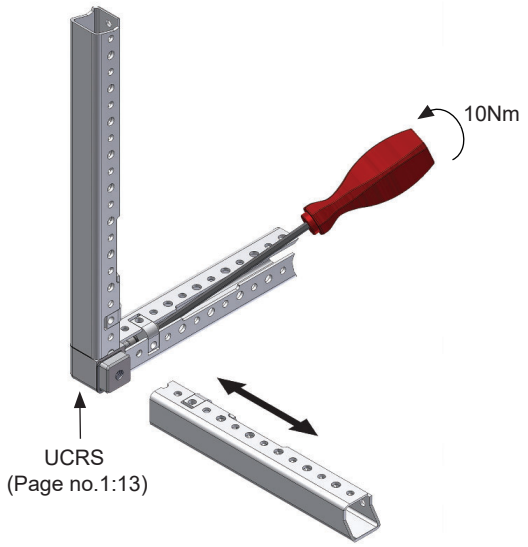

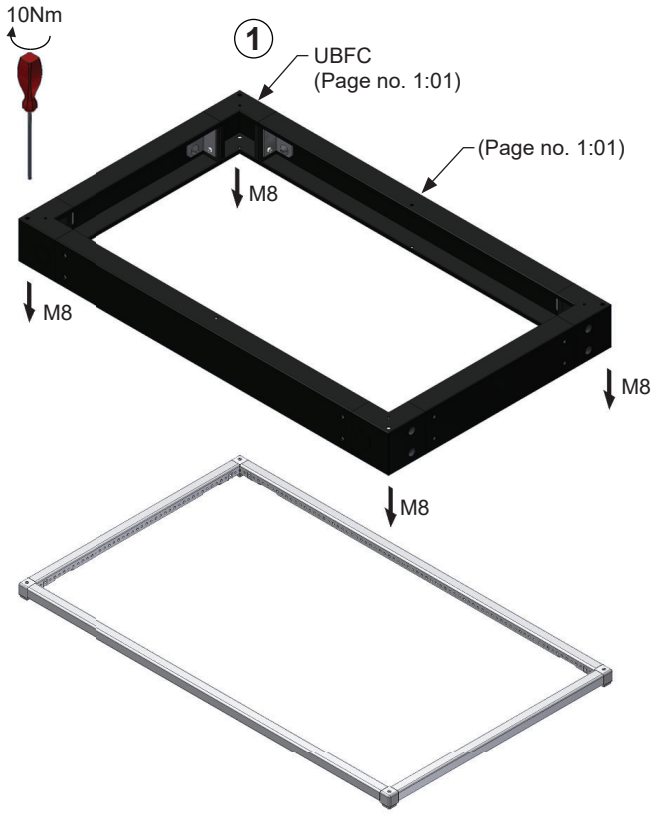

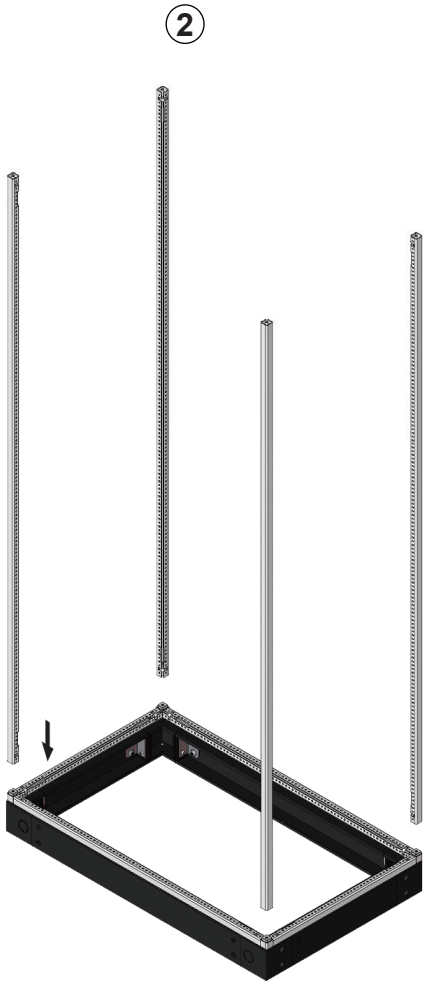

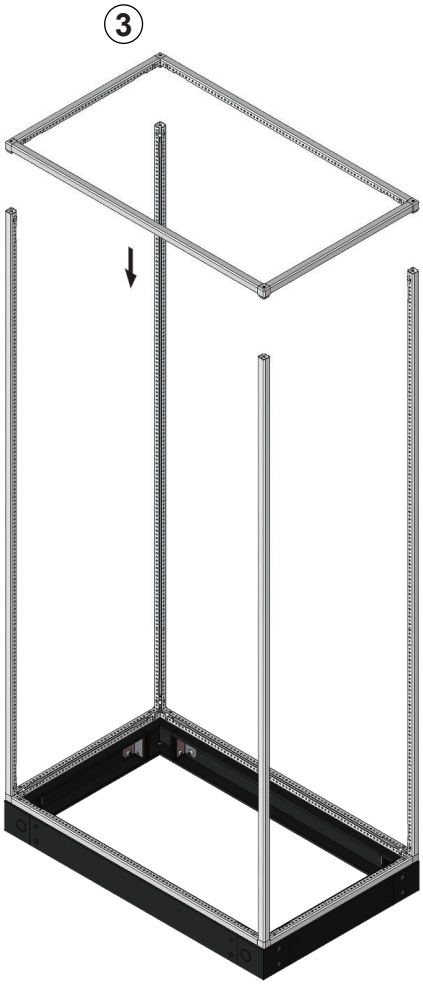

Version 2 Corners must be assembled with Version 2 Corner Bars.

© 1997-2024 ELSTEEL. All Right Reserved

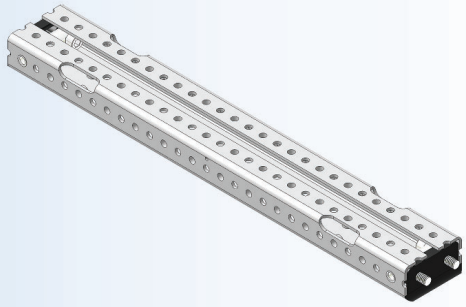

CROSS BAR

CAT. No.	DESCRIPTION	WEIGHT (kg)	ORDER NO. Alu Zinc	ORDER No. RAL 7035 FTF.
UCBS 2	CROSS BAR 200	0.36	U10356	U10354
UCBS 4	CROSS BAR 400	0.73	U10366	U10364
UCBS 6	CROSS BAR 600	1.13	U10376	U10374
UCBS 8	CROSS BAR 800	1.46	U10386	U10384
UCBS 10	CROSS BAR 1000	1.83	U10396	U10394
UCBS 12	CROSS BAR 1200	2.21	U10406	U10404
UCBS 14	CROSS BAR 1400	2.56	U10416	U10414
UCBS 16	CROSS BAR 1600	2.97	U10426	U10424
UCBS 18	CROSS BAR 1800	3.33	U10436	U10434
UCBS 20	CROSS BAR 2000	3.07	U10446	U10444
UCBS 22	CROSS BAR 2200	4.13	U10456	U10454
UCBS 24	CROSS BAR 2400	4.40	U10466	U10464

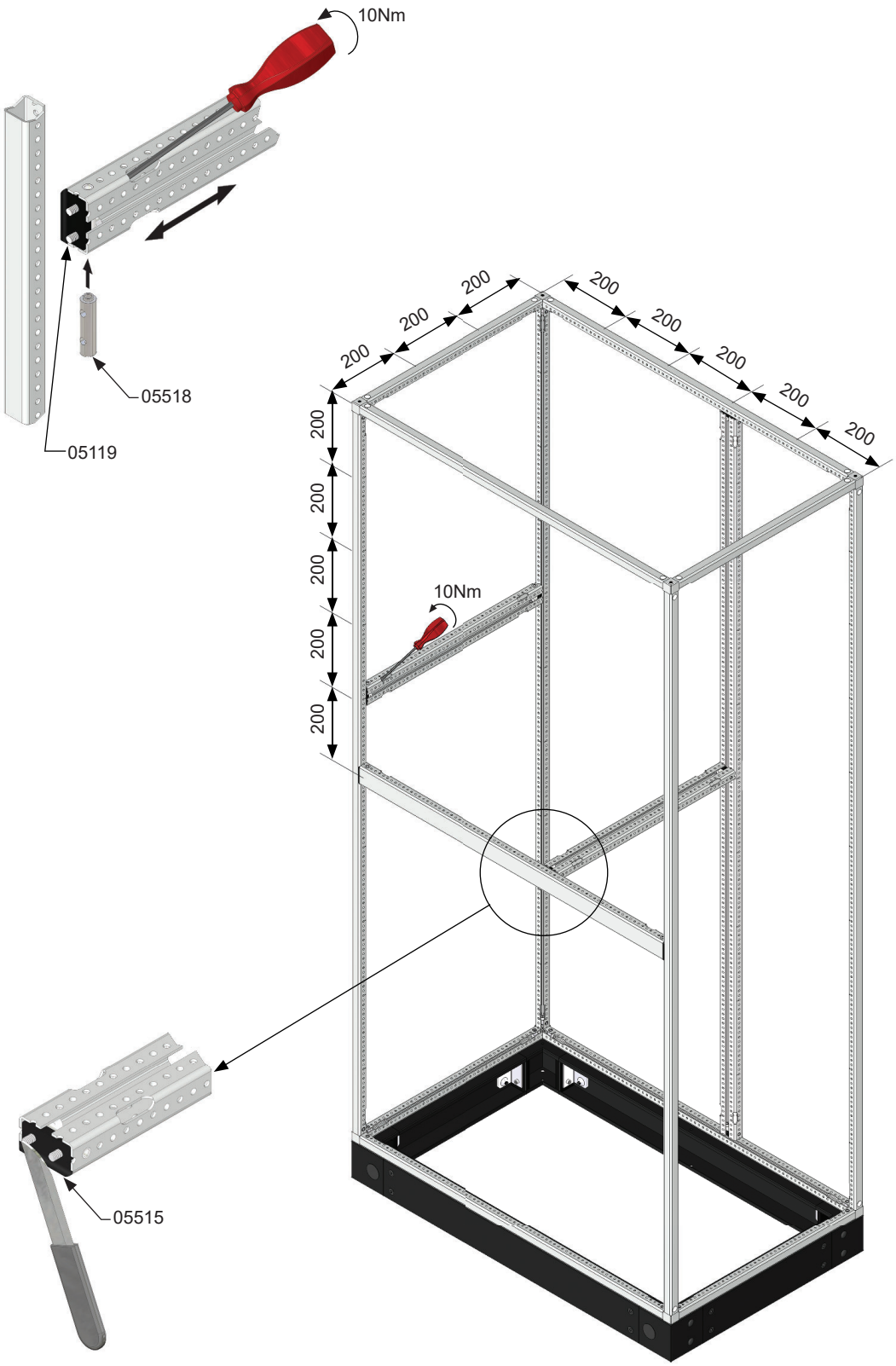

© 1997-2024 ELSTEEL. All Right Reserved

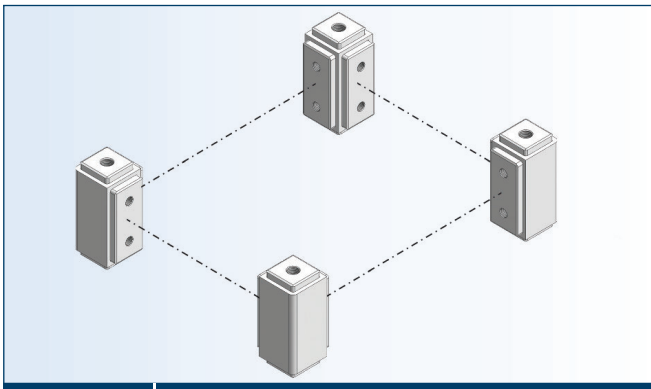

EXTENDED CORNERS

CAT. No.	DESCRIPTION	SIZE (W×H×D)	WEIGHT (kg)	ORDER No. RAL 7035 FTF.
UEC	EXTENDED CORNERS	25 x 50 x 25	0.43	U10194

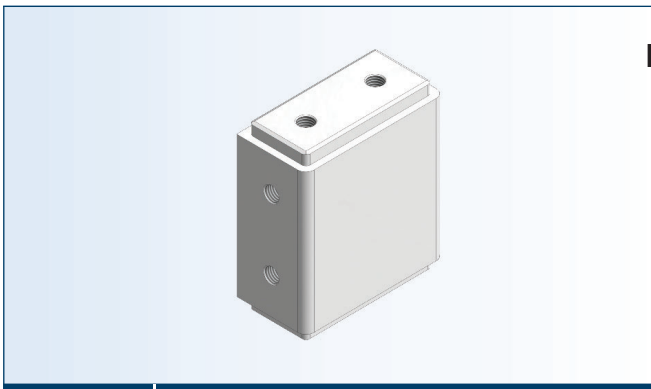

EXTENDED CROSS BAR CORNER

CAT. No.	DESCRIPTION	SIZE (W×H×D)	WEIGHT (kg)	ORDER No. RAL 7035 FTF.
UCBC	EXTENDED CROSS BAR CORNER	50 × 50 × 25	0.18	U10204

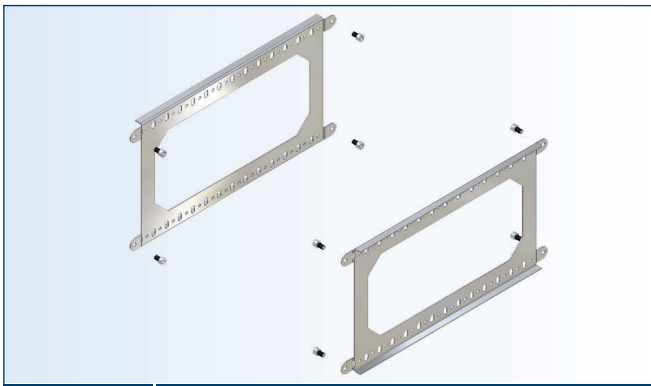

FRAME SUPPORTERS

CAT. No.	DESCRIPTION	PANEL DEPTH	WEIGHT (kg)	ORDER No. Zinc Plated
UFSP 2	FRAME SUPPORTERS	200	0.53	U15620
UFSP 3	FRAME SUPPORTERS	300	0.65	U15630
UFSP 4	FRAME SUPPORTERS	400	0.09	U15640
UFSP 6	FRAME SUPPORTERS	600	1.03	U15650
UFSP 8	FRAME SUPPORTERS	800	1.62	U15660
UFSP 10	FRAME SUPPORTERS	1000	2.65	U15665

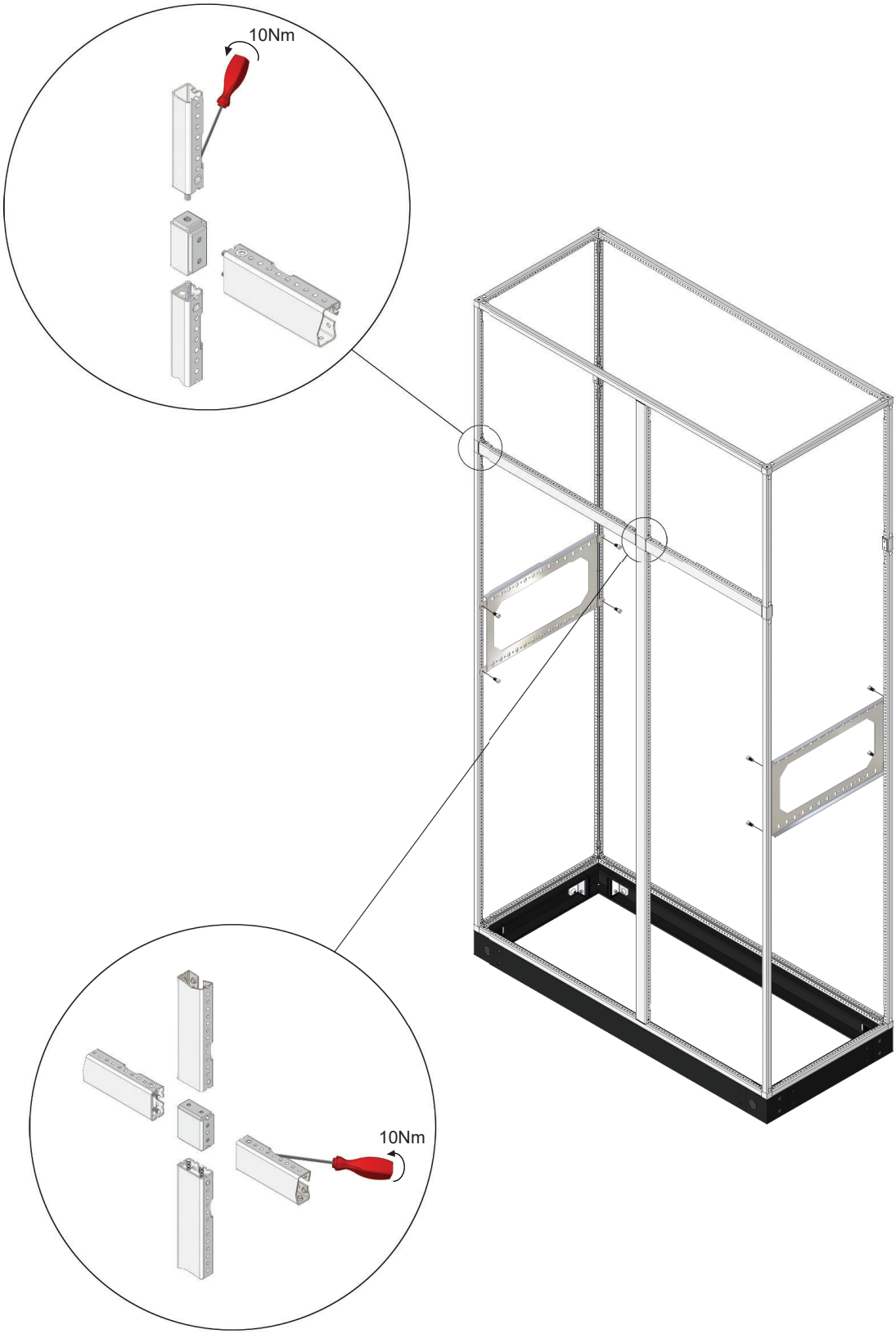

© 1997-2024 ELSTEEL. All Right Reserved

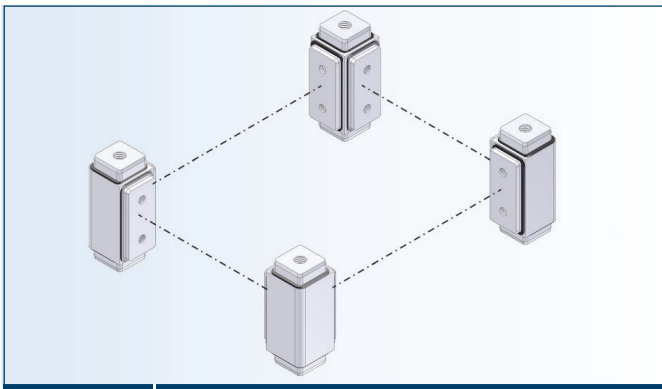

EXTENDED CORNERS VERSION 2

TYPE	DESCRIPTION	SIZE (W×H×D)	WEIGHT (kg)	VERSION 2 ORDER NO. RAL 7035 FTF.
UEC	EXTENDED CORNERS	25×50×25	0.43	U16594

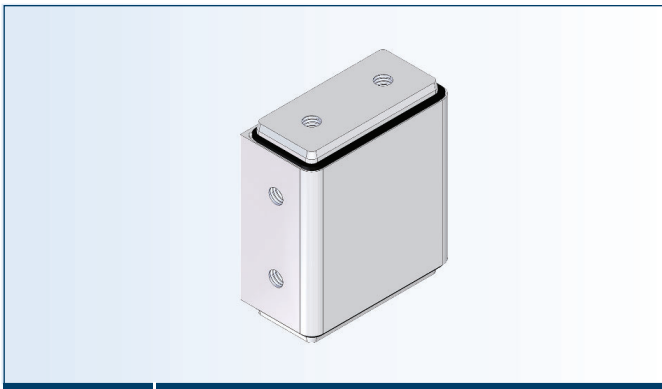

EXTENDED CROSS BAR CORNER VERSION 2

TYPE	DESCRIPTION	SIZE (W×H×D)	WEIGHT (kg)	VERSION 2 ORDER NO. RAL 7035 FTF.
UCBC	EXTENDED CROSS BAR CORNER	50×50×25	0.18	U16604

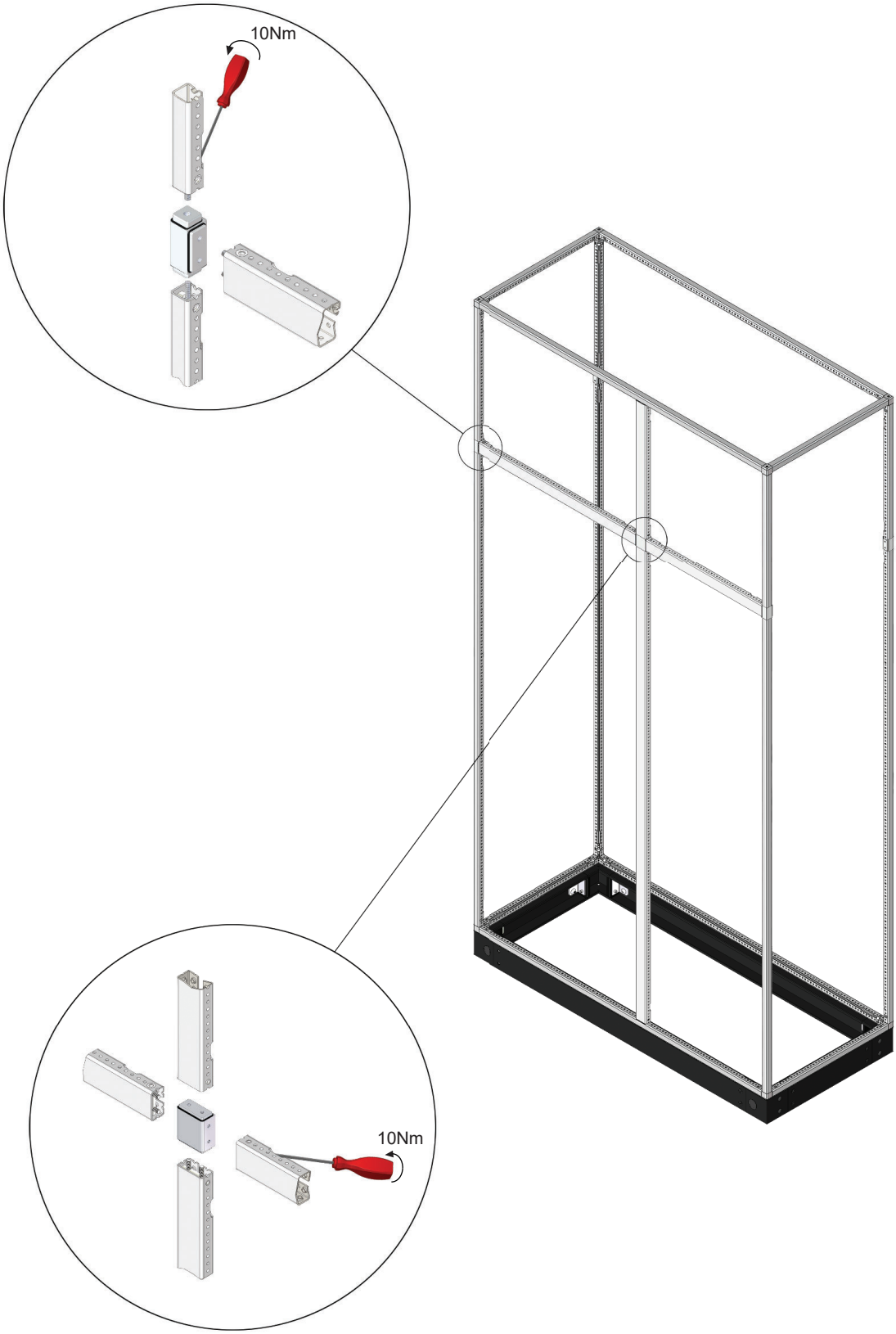

Version 2 Corners must be assembled with Version 2 Corner Bars.

© 1997-2024 ELSTEEL. All Right Reserved

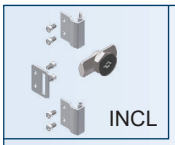

DOOR

CAT. No.	DESCRIPTION	SIZE (W×H)	LOCKS	WEIGHT (kg)	VERSION 3 ORDER No. RAL 7035 FTF.
UDO 2.2	DOOR	200 × 200	1	0.76	U10487
UDO 2.4	DOOR	200 × 400	2	1.53	U10497
UDO 2.6	DOOR	200 × 600	2	2.19	U10507
UDO 2.8	DOOR	200 × 800	3	2.81	U10517
UDO 2.10	DOOR	200 × 1000	3	3.28	U10527
UDO 2.12	DOOR	200 × 1200	3	4.14	U10537
UDO 2.14	DOOR	200 × 1400	3	4.79	U10547
UDO 2.16	DOOR	200 × 1600	4	5.44	U10557
UDO 2.18	DOOR	200 × 1800	4	5.95	U10567
UDO 2.20	DOOR	200 × 2000	4	6.59	U10577
UDO 2.22	DOOR	200 × 2200	4	7.26	U10587
UDO 4.2	DOOR	400 × 200	1	1.58	U10607
UDO 4.3	DOOR	400 × 300	1	2.08	U10617
UDO 4.4	DOOR	400 × 400	2	2.61	U10627
UDO 4.6	DOOR	400 × 600	2	3.68	U10637
UDO 4.8	DOOR	400 × 800	3	5.00	U10647
UDO 4.10	DOOR	400 × 1000	3	5.76	U10657
UDO 4.12	DOOR	400 × 1200	3	7.15	U10667
UDO 4.14	DOOR	400 × 1400	3	8.01	U10677
UDO 4.16	DOOR	400 × 1600	4	9.09	U10687
UDO 4.18	DOOR	400 × 1800	4	10.13	U10697
UDO 4.20	DOOR	400 × 2000	4	11.64	U10707
UDO 4.22	DOOR	400 × 2200	4	12.80	U10717
UDO 6.2	DOOR	600 × 200	1	2.11	U10737
UDO 6.3	DOOR	600 × 300	1	3.04	U10747
UDO 6.4	DOOR	600 × 400	2	3.82	U10757
UDO 6.6	DOOR	600 × 600	2	5.19	U10767
UDO 6.8	DOOR	600 × 800	3	7.13	U10777
UDO 6.10	DOOR	600 × 1000	3	8.72	U10787
UDO 6.12	DOOR	600 × 1200	3	10.40	U10797
UDO 6.14	DOOR	600 × 1400	3	11.72	U10807
UDO 6.16	DOOR	600 × 1600	4	13.84	U10817
UDO 6.18	DOOR	600 × 1800	4	15.17	U10827
UDO 6.20	DOOR	600 × 2000	4	16.69	U10837
UDO 6.22	DOOR	600 × 2200	4	18.19	U10847
UDO 8.4	DOOR	800 × 400	2	5.04	U10867
UDO 8.6	DOOR	800 × 600	2	6.99	U10877
UDO 8.8	DOOR	800 × 800	3	8.65	U10887
UDO 8.10	DOOR	800 × 1000	3	11.35	U10897
UDO 8.12	DOOR	800 × 1200	3	13.48	U10907
UDO 8.14	DOOR	800 × 1400	3	15.59	U10917
UDO 8.16	DOOR	800 × 1600	4	18.11	U10927
UDO 8.18	DOOR	800 × 1800	4	19.66	U10937
UDO 8.20	DOOR	800 × 2000	4	22.45	U10947
UDO 8.22	DOOR	800 × 2200	4	24.13	U10957

CAT. No.	DESCRIPTION	WEIGHT (kg)	VERSION 3 ORDER NO.
UGBFD	GUIDE BRACKETS FOR DOOR	0.038	U11109

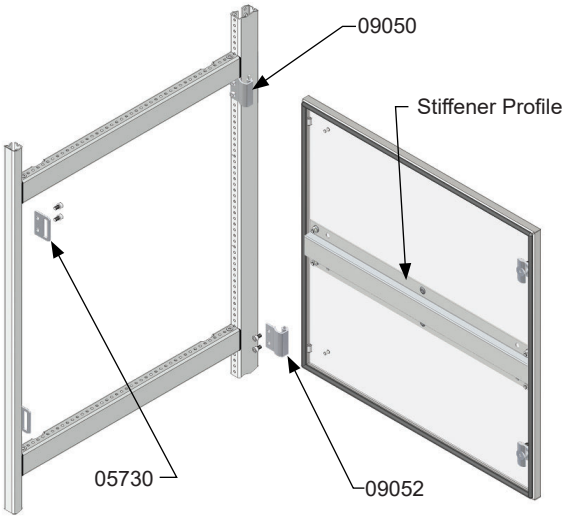

SPARE PARTS

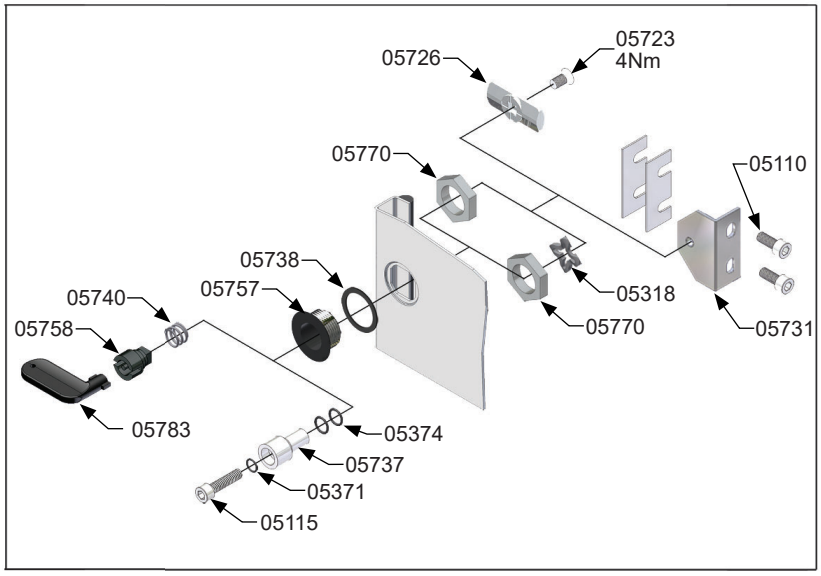

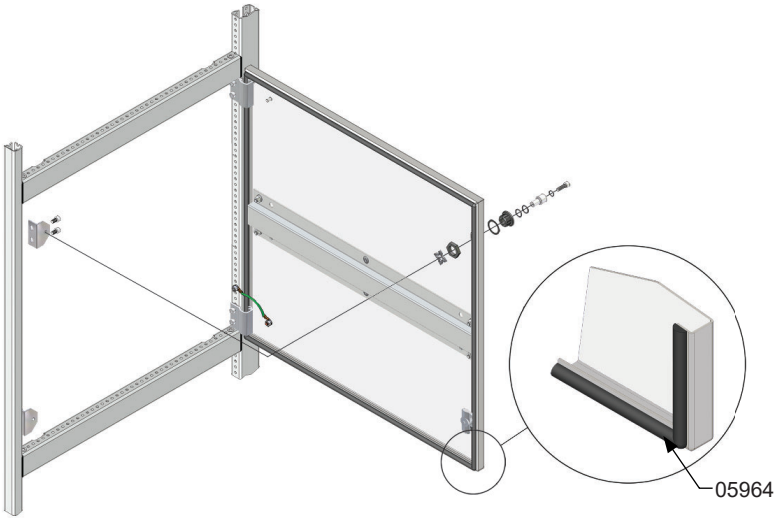

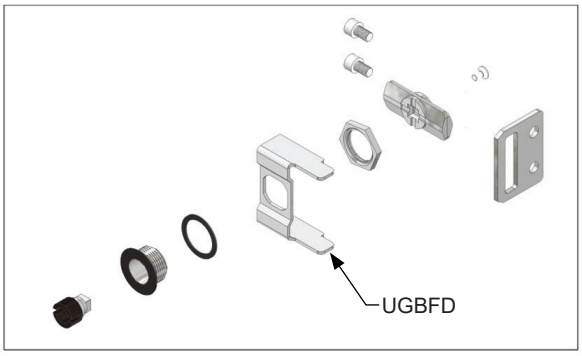

TECHNICAL INFORMATION

TYPE	SIZE (W×H)	SHEET THICKNESS	STIFFENER PROFILE
UDO 2.2	186 × 186	1.5	No
UDO 2.4	186 × 386	1.5	Yes
UDO 2.6	186 × 586	1.5	Yes
UDO 2.8	186 × 786	1.5	Yes
UDO 2.10	186 × 986	1.5	Yes
UDO 2.12	186 × 1186	1.5	Yes
UDO 2.14	186 × 1386	1.5	Yes
UDO 2.16	186 × 1586	1.5	Yes
UDO 2.18	186 × 1786	1.5	Yes
UDO 2.20	186 × 1986	1.5	Yes
UDO 2.22	186 × 2186	1.5	Yes
UDO 4.2	386 × 186	1.5	No
UDO 4.3	386 × 286	1.5	No
UDO 4.4	386 × 386	1.5	Yes
UDO 4.6	386 × 586	1.5	Yes
UDO 4.8	386 × 786	1.5	Yes
UDO 4.10	386 × 986	1.5	Yes
UDO 4.12	386 × 1186	1.5	Yes
UDO 4.14	386 × 1386	1.5	Yes
UDO 4.16	386 × 1586	1.5	Yes
UDO 4.18	386 × 1786	1.5	Yes
UDO 4.20	386 × 1986	1.5	Yes
UDO 4.22	386 × 2186	1.5	Yes
UDO 6.2	586 × 186	1.5	No
UDO 6.3	586 × 286	1.5	No
UDO 6.4	586 × 386	1.5	Yes
UDO 6.6	586 × 586	1.5	Yes
UDO 6.8	586 × 786	1.5	Yes
UDO 6.10	586 × 986	1.5	Yes
UDO 6.12	586 × 1186	1.5	Yes
UDO 6.14	586 × 1386	1.5	Yes
UDO 6.16	586 × 1586	1.5	Yes
UDO 6.18	586 × 1786	1.5	Yes
UDO 6.20	586 × 1986	1.5	Yes
UDO 6.22	586 × 2186	1.5	Yes
UDO 8.4	786 × 386	2.0	Yes
UDO 8.6	786 × 586	2.0	Yes
UDO 8.8	786 × 786	2.0	Yes
UDO 8.10	786 × 986	2.0	Yes
UDO 8.12	786 × 1186	2.0	Yes
UDO 8.14	786 × 1386	2.0	Yes
UDO 8.16	786 × 1586	2.0	Yes
UDO 8.18	786 × 1786	2.0	Yes
UDO 8.20	786 × 1986	2.0	Yes
UDO 8.22	786 × 2186	2.0	Yes

© 1997-2024 ELSTEEL. All Right Reserved

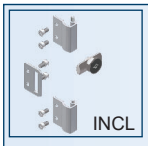

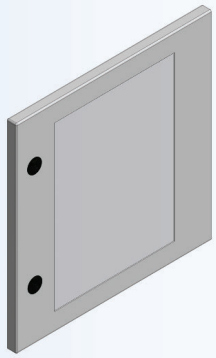

DOOR WITH WINDOW

Tempered
Clear Glass

CAT. No.	DESCRIPTION	SIZE (W×H)	WINDOW SIZE (W×H)	WEIGHT (kg)	VERSION 3 ORDER No. RAL 7035 FTF.
UDW 4.4	DOOR WITH WINDOW	400 × 400	260 × 320	2.51	U11677
UDW 4.6	DOOR WITH WINDOW	400 × 600	260 × 520	3.64	U11687
UDW 6.2	DOOR WITH WINDOW	600 × 200	460 × 120	2.00	U11787
UDW 6.4	DOOR WITH WINDOW	600 × 400	460 × 320	3.64	U11797
UDW 6.6	DOOR WITH WINDOW	600 × 600	460 × 520	5.28	U11807
UDW 6.16	DOOR WITH WINDOW	600 ×1600	460 ×1520	13.49	U11857
UDW 6.18	DOOR WITH WINDOW	600 ×1800	460 ×1720	15.13	U11867
UDW 6.20	DOOR WITH WINDOW	600 ×2000	460 ×1920	16.77	U11877

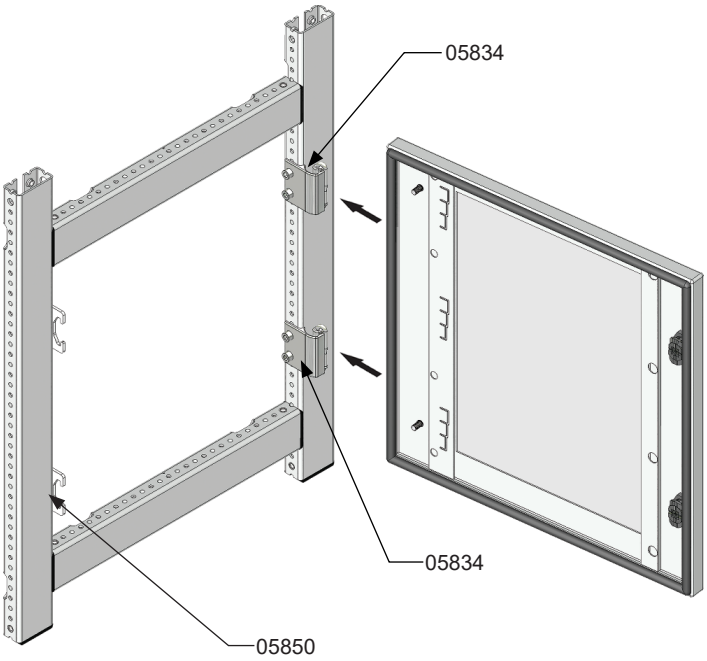

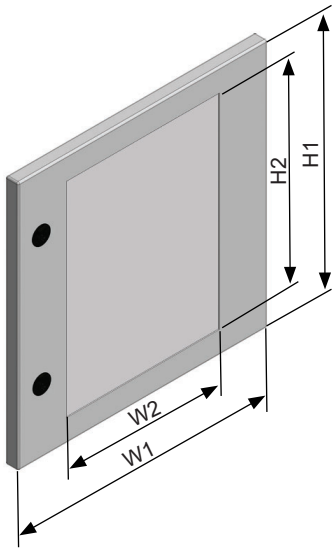

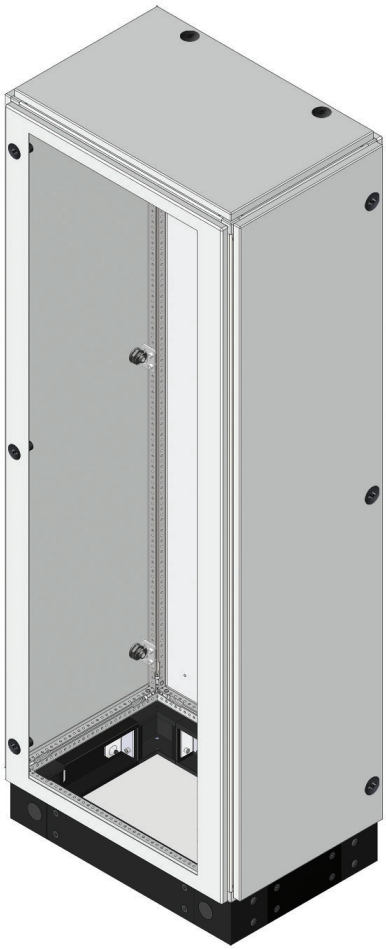

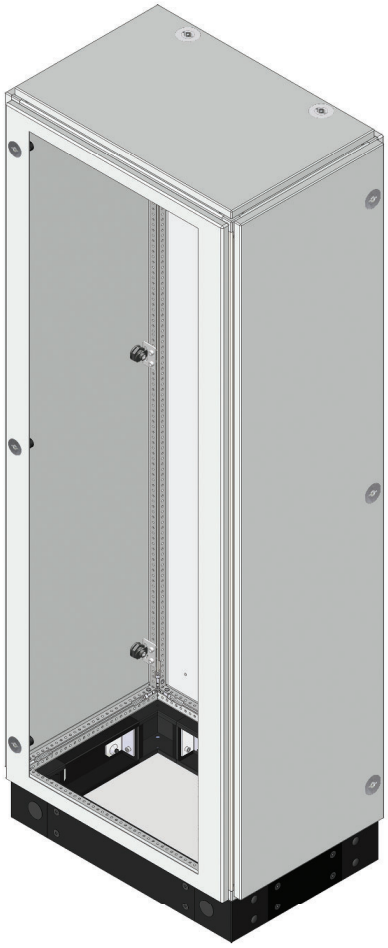

TECHNICAL INFORMATION

TYPE	DOOR SIZE		WINDOW SIZE		SHEET THICKNESS
	W1	H1	W2	H2	
UDW 4.4	386	386	260	305	1.5
UDW 4.6	386	586	260	305	1.5
UDW 6.2	586	186	305	120	2.0
UDW 6.4	586	386	305	305	2.0
UDW 6.6	586	586	305	305	2.0
UDW 6.16	586	1586	305	305	2.0
UDW 6.18	586	1786	305	305	2.0
UDW 6.20	586	1986	305	305	2.0

© 1997-2024 ELSTEEL. All Right Reserved

POCKET

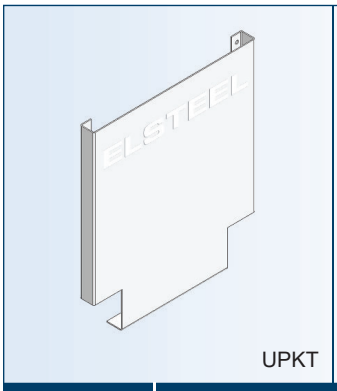

UPKT

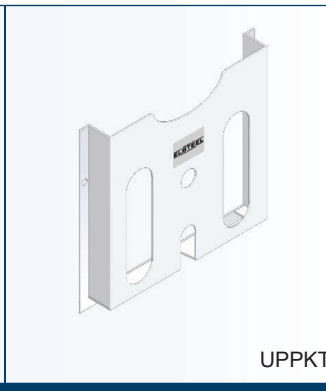

UPPKT

CAT. No.	DESCRIPTION	WEIGHT (kg)	ORDER No. RAL 9010 SMF.
UPKT	POCKET - STEEL	0.69	U14441
UPPKT	POCKET - PLASTIC	0.30	U14446

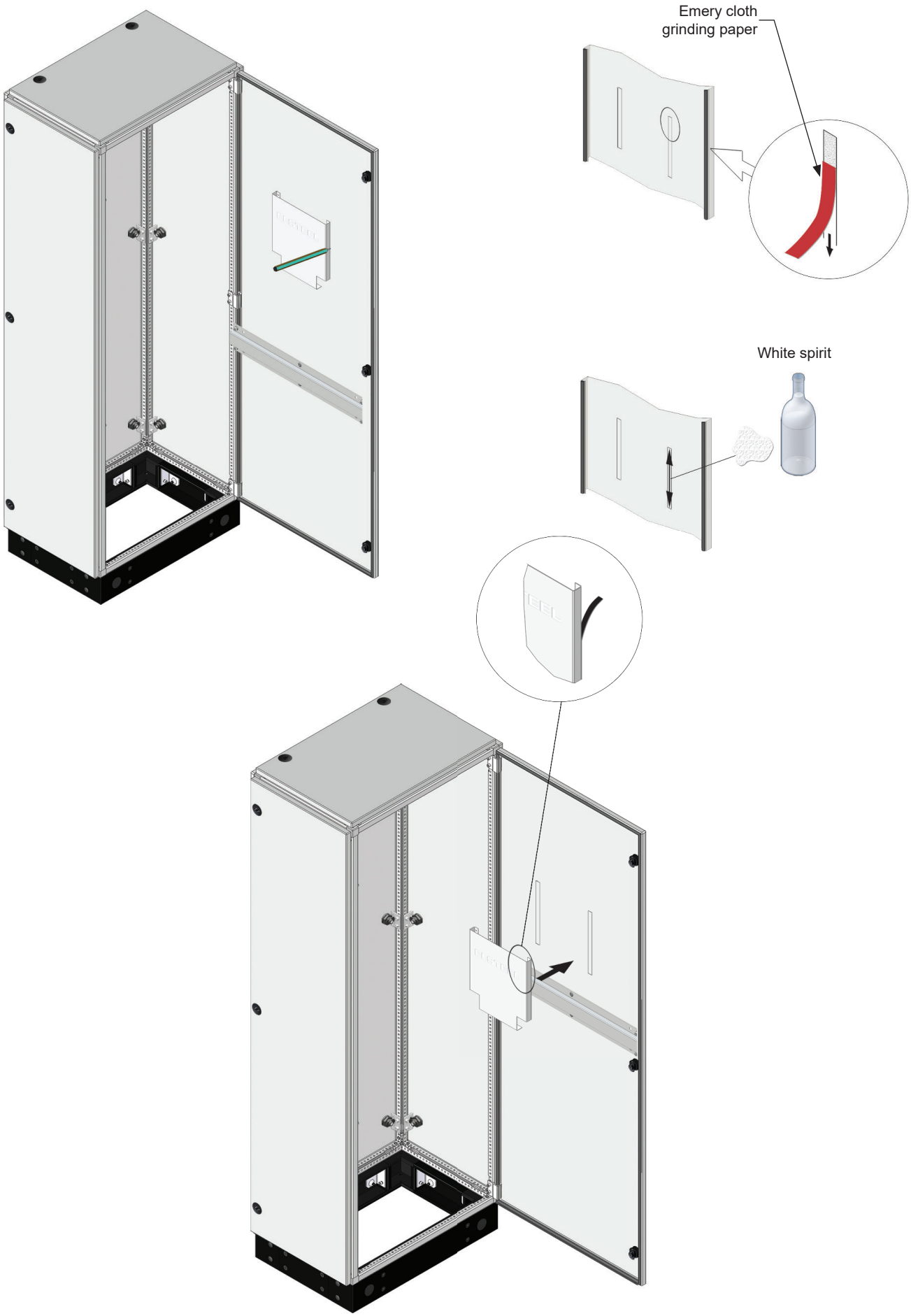

© 1997-2024 ELSTEEL. All Right Reserved

SQUARE/ TRIANGLE LOCK INSERT

SQI 8

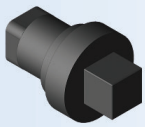

×50 Nos.

SQI 6

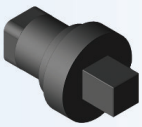

×50 Nos.

TRI

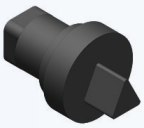

×50 Nos.

SPZ

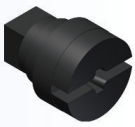

×50 Nos.

CAT. No.	DESCRIPTION	WEIGHT (kg)	VERSION 3 ORDER No. Steel black
USQI 8	SQUARE 8mm	0.02	U12094
USQI 6	SQUARE 6mm	0.01	U12095
UTRI	TRIANGULAR 8mm	0.03	U12096
USPZ	SLOT 2×15+PH4 POZIDRIVE	0.03	U12097

KNOB LOCK

KLST

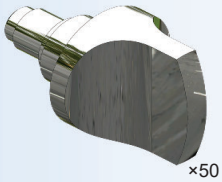

×50 Nos.

KLSB

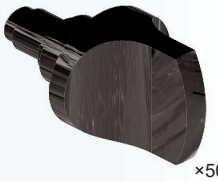

×50 Nos.

CAT. No.	DESCRIPTION	WEIGHT (kg)	VERSION 3 ORDER No. AISI 316	VERSION 3 ORDER No. Steel black
UKLST	KNOB LOCK - STAINLESS STEEL	0.06	U12088	-
UKLSB	KNOB LOCK - STEEL BLACK	0.06	-	U12101

KEY LOCK

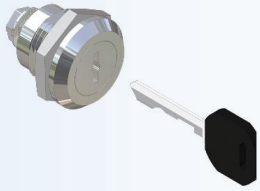

CAT. No.	DESCRIPTION	WEIGHT (kg)	VERSION 3 ORDER No. Keyed alike	VERSION 3 ORDER No. Keyed different
UKELS	KEY LOCK - STEEL	0.07	U12171	U12173
UKELP	KEY LOCK - PLASTIC	0.04	U12175	U12176

T-HANDLE LOCK

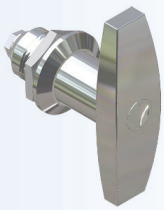

CAT. No.	DESCRIPTION	WEIGHT (kg)	VERSION 3 ORDER No. Non locking	VERSION 3 ORDER No. Keyed alike	VERSION 3 ORDER No. Keyed different
UTHLC	T-HANDLE LOCK - CHROME PLATED	0.16	U12207	U12208	U12209
UTHLB	T-HANDLE LOCK - POLYAMIDE BLACK	0.10	U12199	U12201	U12203

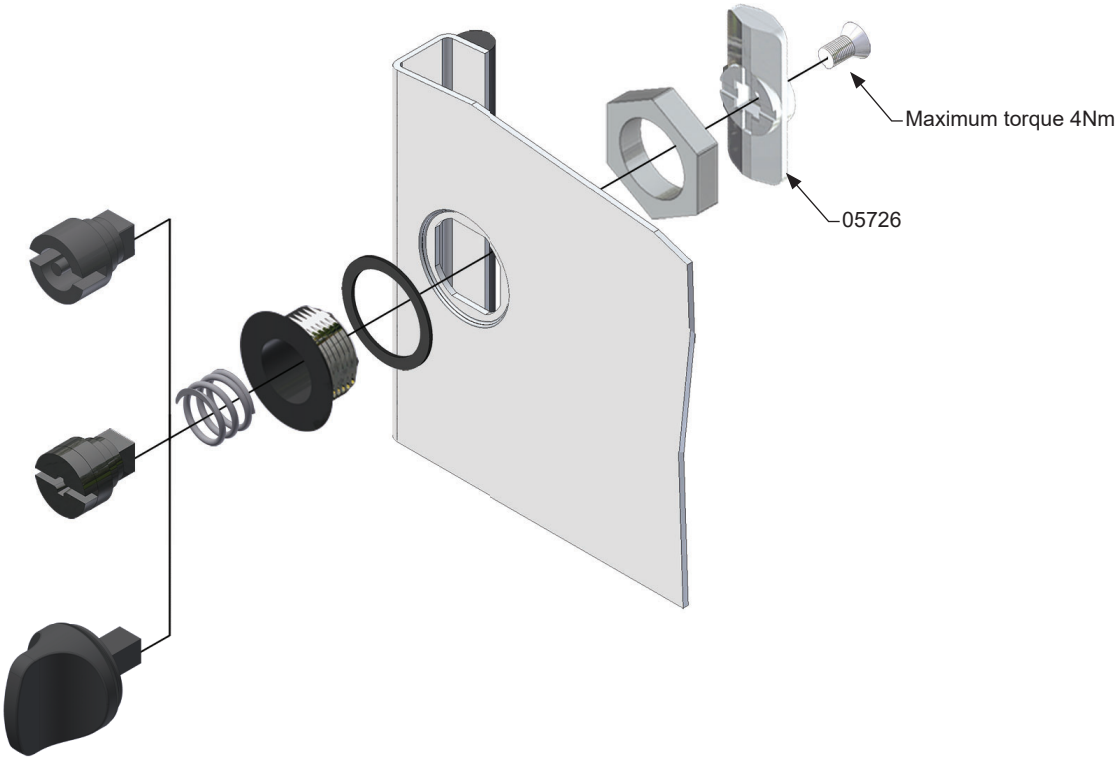

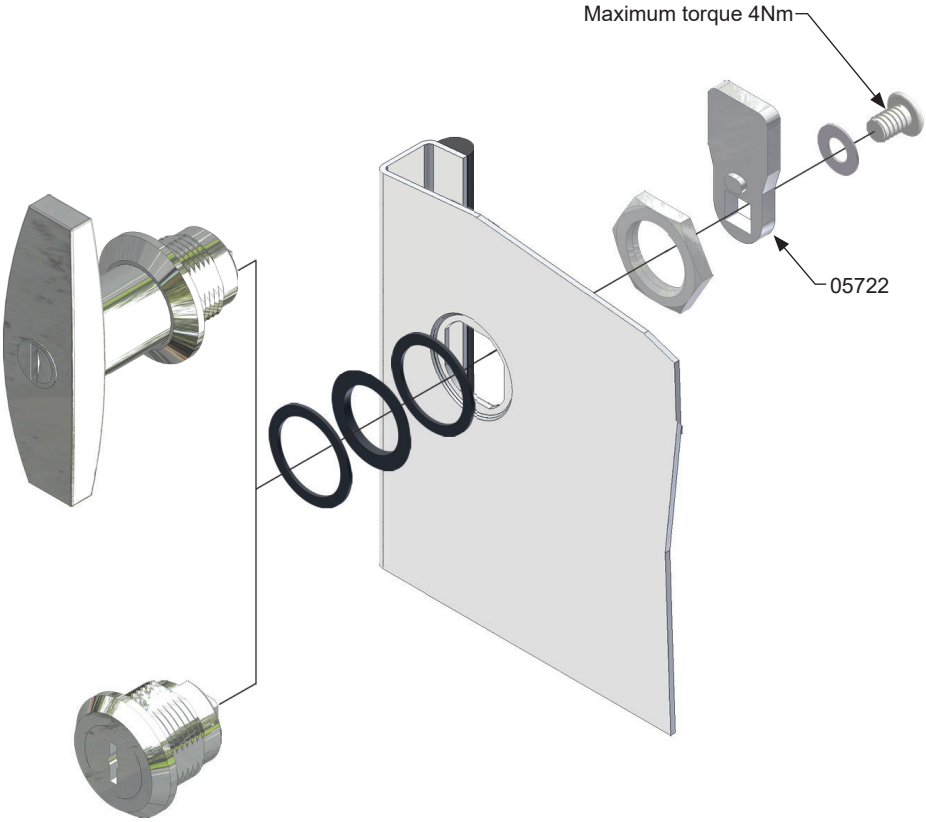

© 1997-2024 ELSTEEL. All Right Reserved

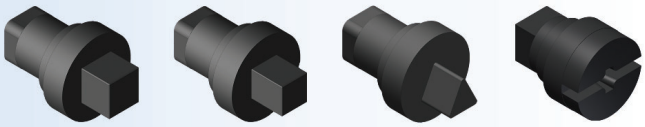

DOOR WITH SWING HANDLE

CAT. No.	DESCRIPTION	SIZE (W×H)	WEIGHT (kg)	VERSION 3 ORDER No. RAL 7035 FTF.
UDWSH 6.10	DOOR WITH SWING HANDLE	600 × 1000	8.80	U12307
UDWSH 6.12	DOOR WITH SWING HANDLE	600 × 1200	10.56	U12317
UDWSH 6.14	DOOR WITH SWING HANDLE	600 × 1400	2.22	U12327
UDWSH 6.16	DOOR WITH SWING HANDLE	600 × 1600	8.80	U12337
UDWSH 6.18	DOOR WITH SWING HANDLE	600 × 1800	10.56	U12347
UDWSH 6.20	DOOR WITH SWING HANDLE	600 × 2000	2.22	U12357
UDWSH 6.22	DOOR WITH SWING HANDLE	600 × 2200	14.00	U12367
UDWSH 8.10	DOOR WITH SWING HANDLE	800 × 1000	11.73	U12377
UDWSH 8.12	DOOR WITH SWING HANDLE	800 × 1200	14.01	U12387
UDWSH 8.14	DOOR WITH SWING HANDLE	800 × 1400	15.80	U12397
UDWSH 8.16	DOOR WITH SWING HANDLE	600 × 1600	15.40	U12407
UDWSH 8.18	DOOR WITH SWING HANDLE	600 × 1800	17.60	U12417
UDWSH 8.20	DOOR WITH SWING HANDLE	600 × 2000	19.10	U12427
UDWSH 8.22	DOOR WITH SWING HANDLE	800 × 2200	11.73	U12437

Double Bit 3 | Square 8 | Key Lock

LOCK INSERTS FOR SWING HANDLE

CAT. No.	DESCRIPTION	WEIGHT (kg)	ORDER No. Non locking	ORDER No. Keyed alike	ORDER No. Keyed different
UDOB 3	DOUBLE BIT 3	0.06	U12100	-	-
USQ 8	SQUARE 8	0.05	U12105	-	-
UKLSH	KEY LOCK	0.07	-	U12111	U12112

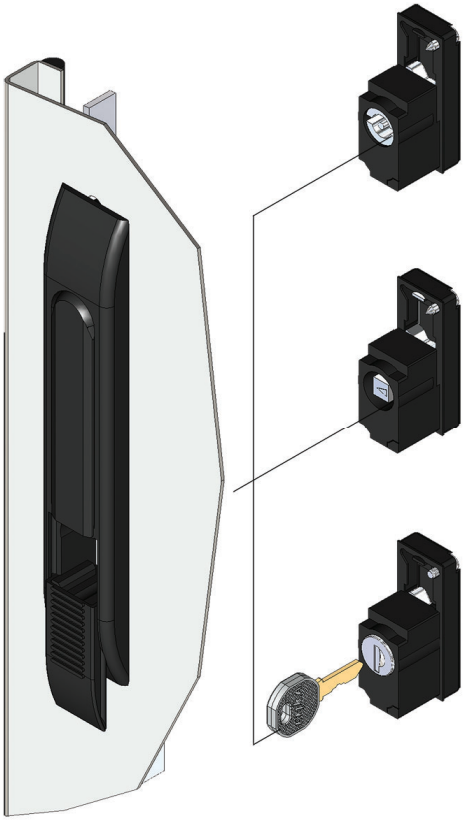

TECHNICAL INFORMATION

TYPE	DOOR SIZE		SHEET THICKNESS
	W	H	
UDWHN 6.10	586	986	1.5
UDWHN 6.12	586	1186	1.5
UDWHN 6.14	586	1386	1.5
UDWHN 6.16	586	1586	1.5
UDWHN 6.18	586	1786	1.5
UDWHN 6.20	586	1986	1.5
UDWHN 6.22	586	2186	1.5
UDWHN 8.10	786	986	2.0
UDWHN 8.12	786	1186	2.0
UDWHN 8.14	786	1386	2.0
UDWHN 8.16	786	1586	2.0
UDWHN 8.18	786	1786	2.0
UDWHN 8.20	786	1986	2.0
UDWHN 8.22	786	2186	2.0

© 1997-2024 ELSTEEL. All Right Reserved

T-HANDLE LOCK CLOSING SYSTEM

CAT. No.	DESCRIPTION	WEIGHT (kg)	VERSION 3 ORDER No. Non locking	VERSION 3 ORDER No. Keyed alike	VERSION 3 ORDER No. Keyed different
UTHL 8	T-HANDLE LOCK CLOSING SYSTEM	0.26	U12050	U12060	U12070
UTHL 10	T-HANDLE LOCK CLOSING SYSTEM	0.87	U12051	U12061	U12071
UTHL 12	T-HANDLE LOCK CLOSING SYSTEM	0.95	U12052	U12062	U12072
UTHL 14	T-HANDLE LOCK CLOSING SYSTEM	1.04	U12053	U12063	U12073
UTHL 16	T-HANDLE LOCK CLOSING SYSTEM	1.27	U12054	U12064	U12074
UTHL 18	T-HANDLE LOCK CLOSING SYSTEM	1.35	U12055	U12065	U12075
UTHL 20	T-HANDLE LOCK CLOSING SYSTEM	1.43	U12056	U12066	U12076
UTHL 22	T-HANDLE LOCK CLOSING SYSTEM	1.51	U12057	U12067	U12077

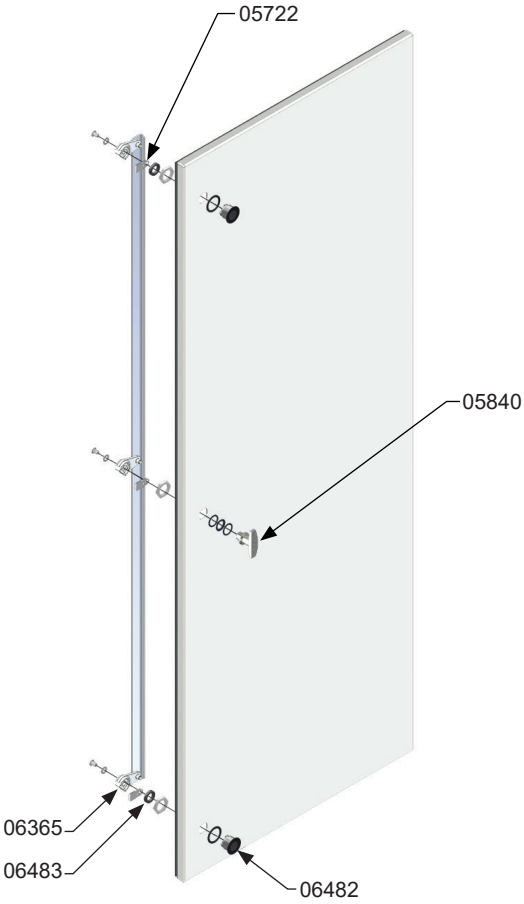

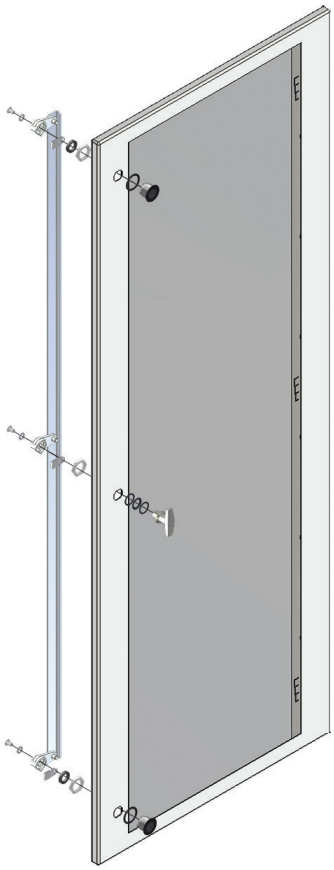

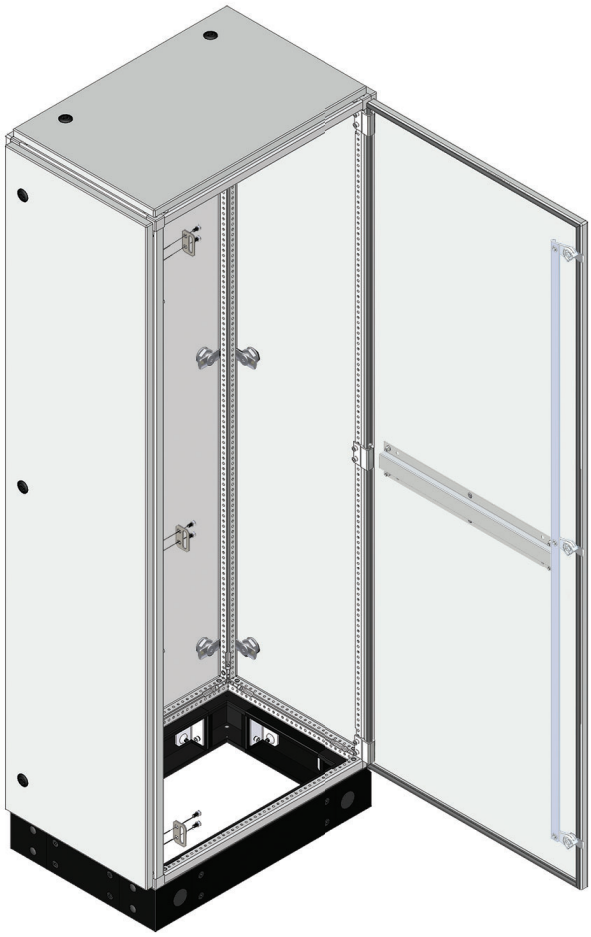

© 1997-2024 ELSTEEL. All Right Reserved

SWING HANDLE CLOSING SYSTEM

CAT. No.	DESCRIPTION	SIZE (H)	WEIGHT (kg)	VERSION 3 ORDER No.
USWHN 16	SWING HANDLE CLOSING SYSTEM	1600	1.41	U12470
USWHN 18	SWING HANDLE CLOSING SYSTEM	1800	1.45	U12471
USWHN 20	SWING HANDLE CLOSING SYSTEM	2000	1.48	U12472
USWHN 22	SWING HANDLE CLOSING SYSTEM	2200	1.52	U12473

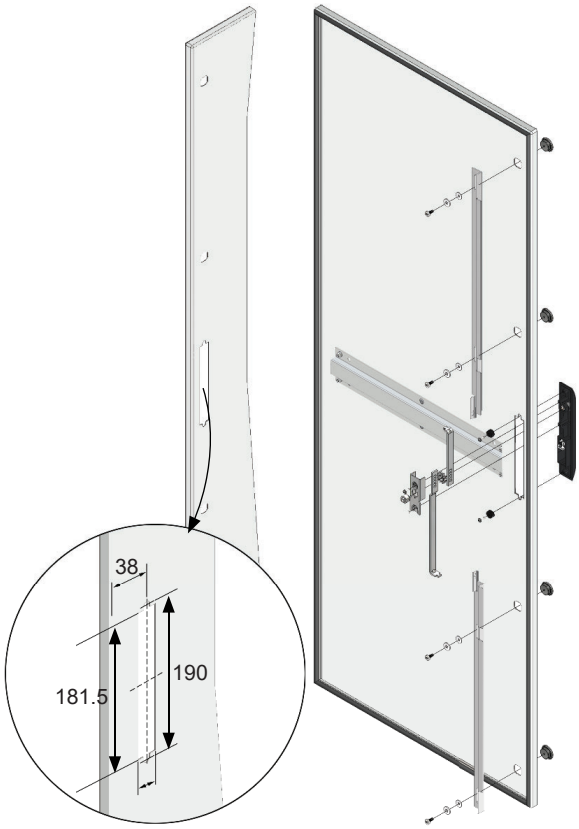

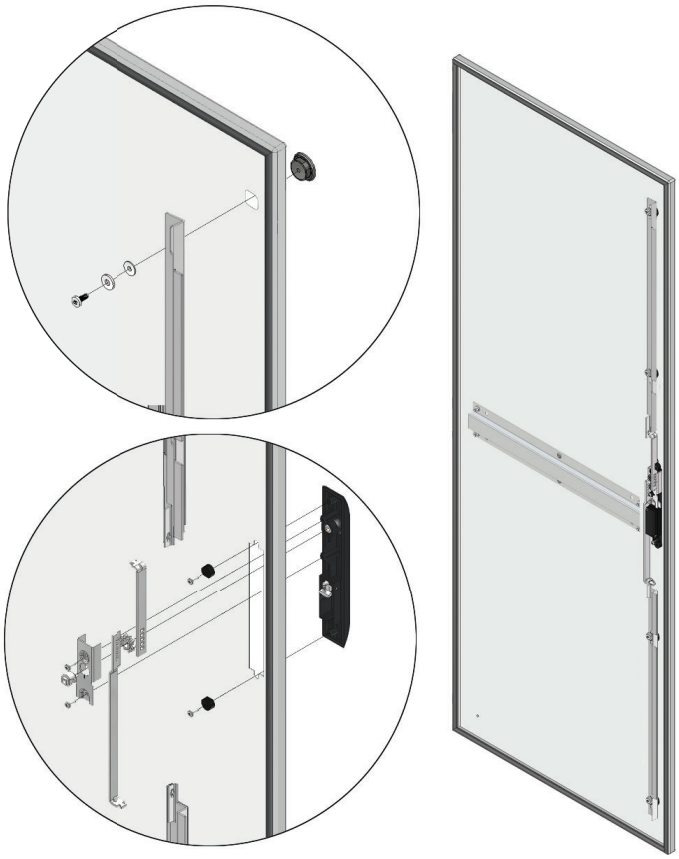

© 1997-2024 ELSTEEL. All Right Reserved

DOOR INTER LOCK

CAT. No.	DESCRIPTION	WEIGHT (kg)	VERSION 3 ORDER No. RAL 7035 FTF.
UDIL 6	DOOR INTER LOCK 600	1.10	U15047
UDIL 8	DOOR INTER LOCK 800	1.52	U15057
UDIL 10	DOOR INTER LOCK 1000	1.94	U15067
UDIL 12	DOOR INTER LOCK 1200	2.29	U15077
UDIL 14	DOOR INTER LOCK 1400	2.67	U15087
UDIL 16	DOOR INTER LOCK 1600	3.05	U15097
UDIL 18	DOOR INTER LOCK 1800	3.44	U15107
UDIL 20	DOOR INTER LOCK 2000	3.82	U15117
UDIL 22	DOOR INTER LOCK 2200	4.15	U15127

SWITCH FOR DOOR

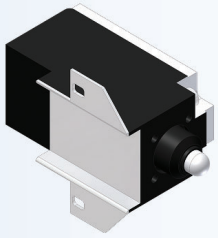

x 2 Nos.

CAT. No.	DESCRIPTION	WEIGHT (kg)	ORDER No.
USSFD	SWITCH FOR DOOR (1NO+1NC)	0.83	U17100

TM LOCK COVER

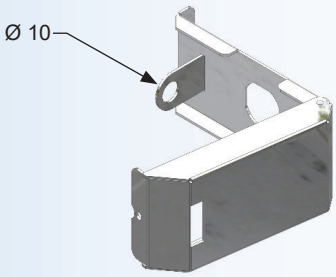

CAT. No.	DESCRIPTION	WEIGHT (kg)	ORDER No. SS 1.2mm AISI 304
UTMCOV	TM LOCK COVER	0.15	U11104

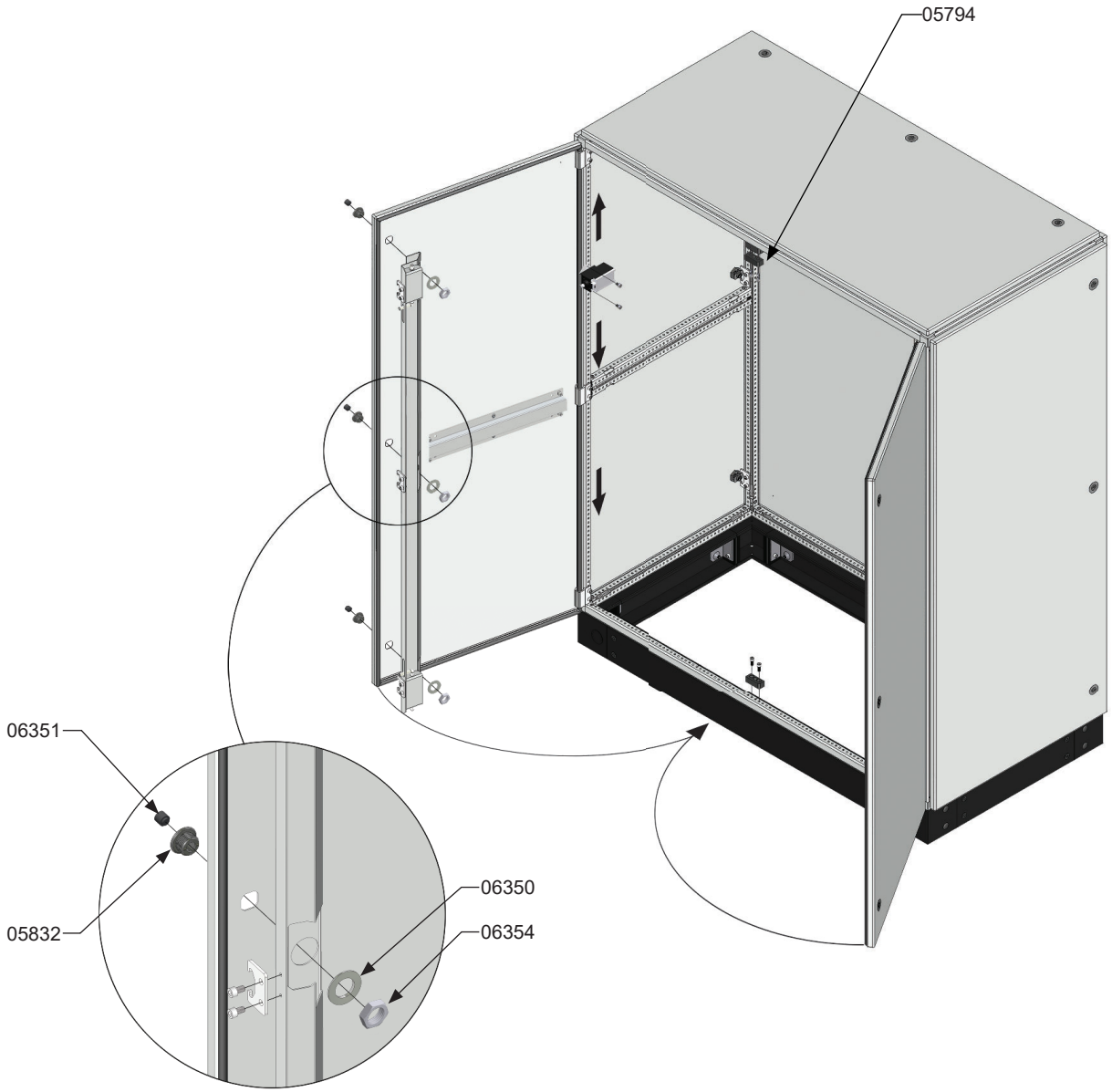

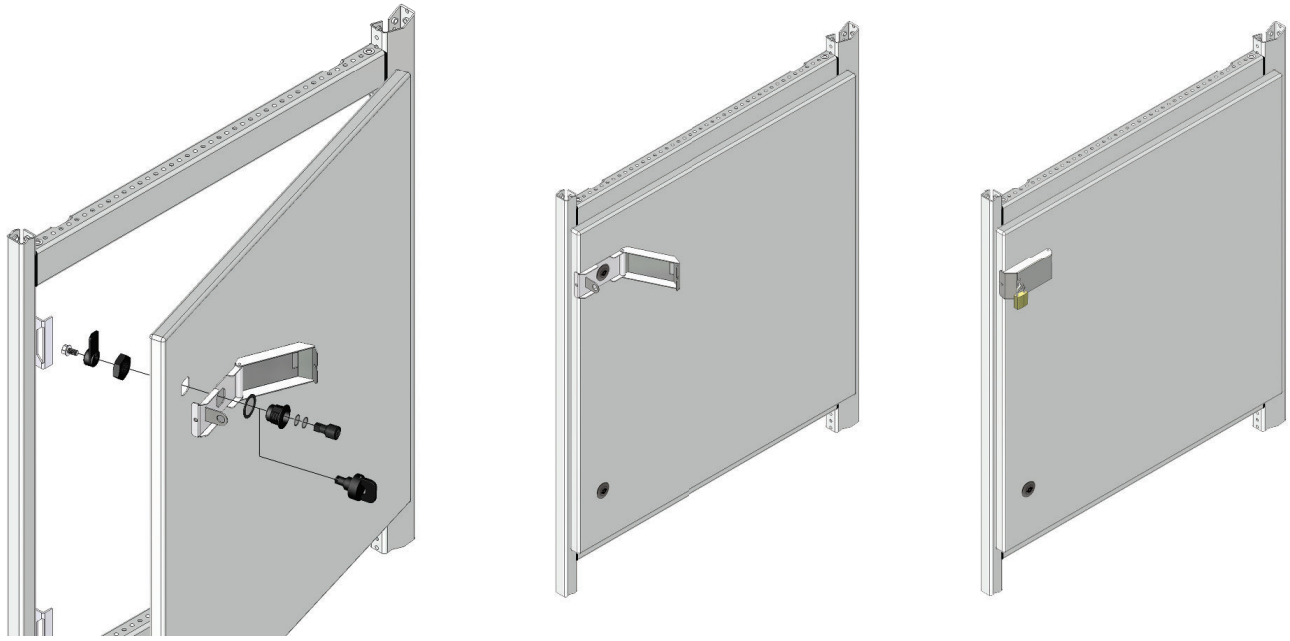

© 1997-2024 ELSTEEL. All Right Reserved

DOOR STAY

CAT. No.	DESCRIPTION	WEIGHT (kg)	ORDER No.
UDOST	DOOR STAY	0.17	U15151

For doors higher than 600mm, use 2 door stays,

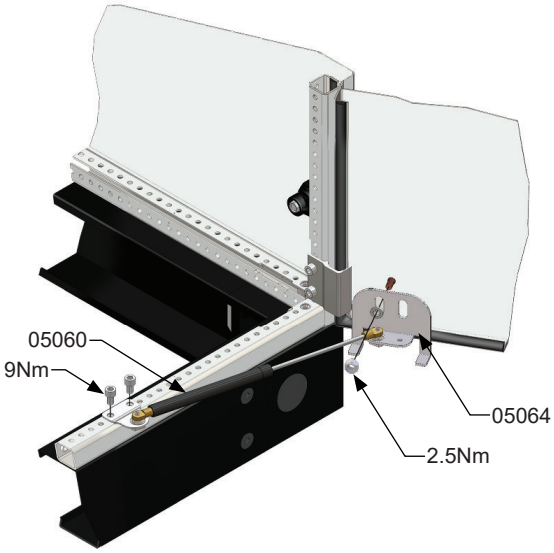

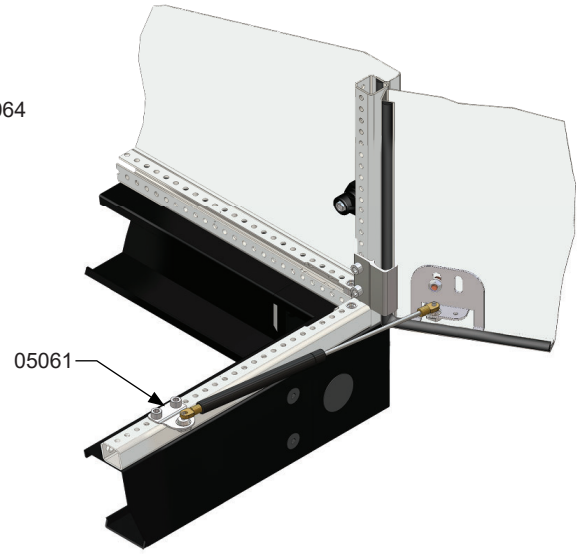

© 1997-2024 ELSTEEL. All Right Reserved

COVER

CAT. No.	DESCRIPTION	SIZE (W×H)	WEIGHT (kg)	VERSION 3 ORDER No. RAL 7035 FTF.
UCOV 2.2	COVER	200 × 200	0.85	U11137
UCOV 2.4	COVER	200 × 400	1.45	U11147
UCOV 2.6	COVER	200 × 600	2.10	U11157
UCOV 2.8	COVER	200 × 800	2.77	U11167
UCOV 2.10	COVER	200 × 1000	3.29	U11177
UCOV 2.12	COVER	200 × 1200	3.95	U11187
UCOV 2.14	COVER	200 × 1400	4.64	U11197
UCOV 2.16	COVER	200 × 1600	5.26	U11207
UCOV 2.18	COVER	200 × 1800	5.79	U11217
UCOV 2.20	COVER	200 × 2000	6.53	U11227
UCOV 2.22	COVER	200 × 2200	8.87	U11237
UCOV 4.3	COVER	400 × 300	2.01	U11257
UCOV 4.4	COVER	400 × 400	2.41	U11267
UCOV 4.6	COVER	400 × 600	3.74	U11277
UCOV 4.8	COVER	400 × 800	4.91	U11287
UCOV 4.10	COVER	400 × 1000	6.01	U11297
UCOV 4.12	COVER	400 × 1200	6.80	U11307
UCOV 4.14	COVER	400 × 1400	7.84	U11317
UCOV 4.16	COVER	400 × 1600	9.21	U11327
UCOV 4.18	COVER	400 × 1800	10.21	U11337
UCOV 4.20	COVER	400 × 2000	11.43	U11347
UCOV 4.22	COVER	400 × 2200	12.64	U11357
UCOV 6.3	COVER	600 × 300	3.00	U11377
UCOV 6.6	COVER	600 × 600	5.28	U11387
UCOV 6.8	COVER	600 × 800	6.90	U11397
UCOV 6.10	COVER	600 × 1000	8.62	U11407
UCOV 6.12	COVER	600 × 1200	10.40	U11417
UCOV 6.14	COVER	600 × 1400	11.82	U11427
UCOV 6.16	COVER	600 × 1600	13.51	U11437
UCOV 6.18	COVER	600 × 1800	15.01	U11447
UCOV 6.20	COVER	600 × 2000	16.01	U11457
UCOV 6.22	COVER	600 × 2200	18.23	U11467
UCOV 8.8	COVER	800 × 800	9.24	U11487
UCOV 8.10	COVER	800 × 1000	11.61	U11497
UCOV 8.12	COVER	800 × 1200	13.38	U11507
UCOV 8.14	COVER	800 × 1400	15.49	U11517
UCOV 8.16	COVER	800 × 1600	17.24	U11527
UCOV 8.18	COVER	800 × 1800	19.59	U11537
UCOV 8.20	COVER	800 × 2000	21.80	U11547
UCOV 8.22	COVER	800 × 2200	23.92	U11557

COVER SEAL SYSTEM

CAT. No.	DESCRIPTION	WEIGHT (kg)	ORDER No.
UCSES	COVER SEAL SYSTEM	0.02	U30860

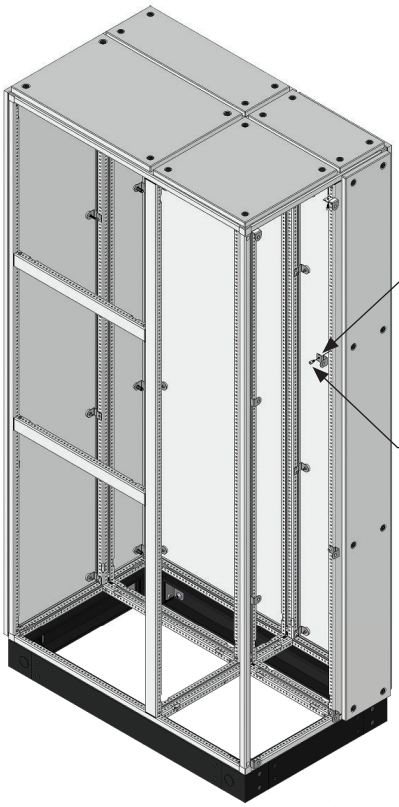

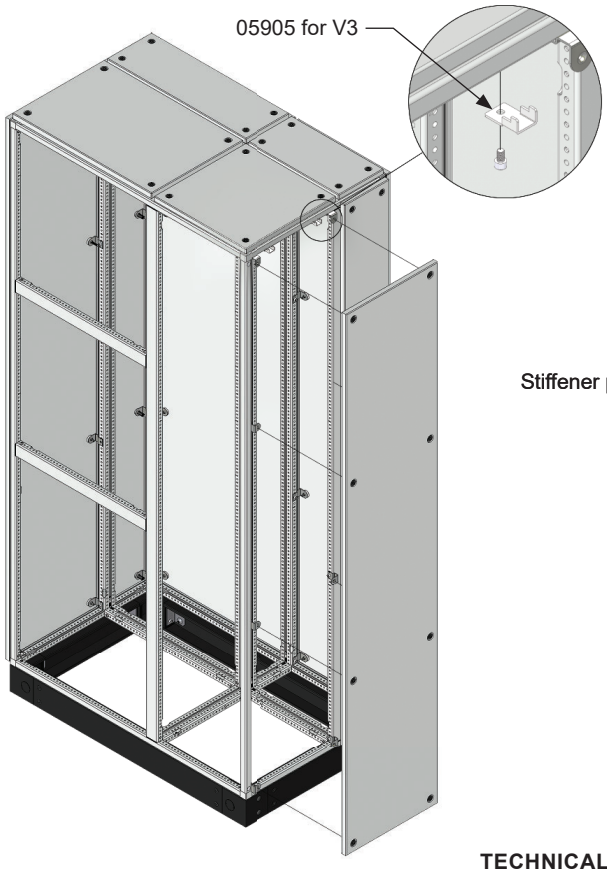

Supporting brackets are supplied for Covers of height 1800 and above

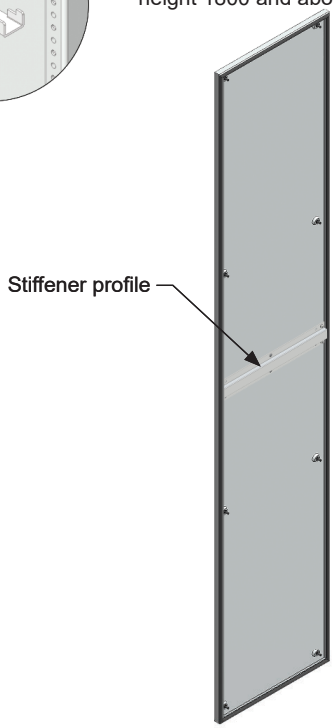

When assembling cover on top of vertical separation plate use steel spacer (05799)

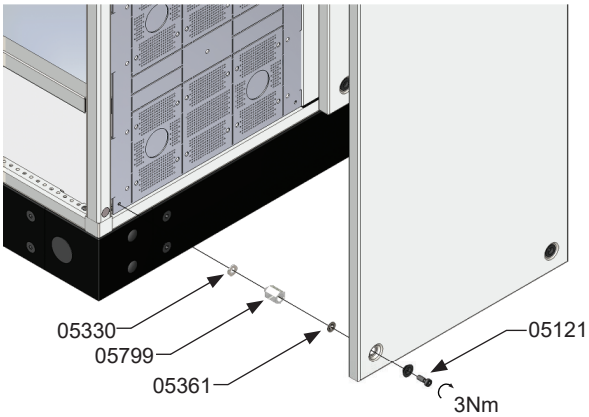

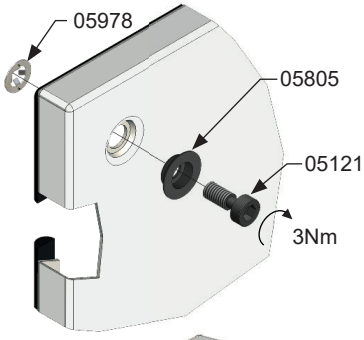

When assembling cover with mounting rail use steel spacer (05791)

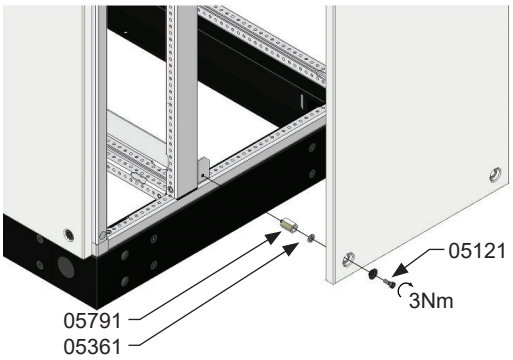

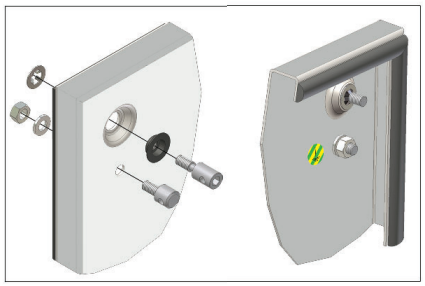

TECHNICAL INFORMATION

TYPE	SIZE		SHEET THICKNESS	STIFFENER PROFILE
	W	H		
UCOV 2.2	186	186	1.5	No
UCOV 2.4	186	386	1.5	Yes
UCOV 2.6	186	586	1.5	Yes
UCOV 2.8	186	786	1.5	Yes
UCOV 2.10	186	986	1.5	Yes
UCOV 2.12	186	1186	1.5	Yes
UCOV 2.14	186	1386	1.5	Yes
UCOV 2.16	186	1586	1.5	Yes
UCOV 2.18	186	1786	1.5	Yes
UCOV 2.20	186	1986	1.5	Yes
UCOV 2.22	186	2186	1.5	Yes
UCOV 4.3	386	286	1.5	No
UCOV 4.4	386	386	1.5	Yes
UCOV 4.6	386	586	1.5	Yes
UCOV 4.8	386	786	1.5	Yes
UCOV 4.10	386	986	1.5	Yes
UCOV 4.12	386	1186	1.5	Yes
UCOV 4.14	386	1386	1.5	Yes
UCOV 4.16	386	1586	1.5	Yes
UCOV 4.18	386	1786	1.5	Yes
UCOV 4.20	386	1986	1.5	Yes
UCOV 4.22	386	2186	1.5	Yes
UCOV 6.3	586	286	1.5	No
UCOV 6.6	586	586	1.5	Yes
UCOV 6.8	586	786	1.5	Yes
UCOV 6.10	586	986	1.5	Yes
UCOV 6.12	586	1186	1.5	Yes
UCOV 6.14	586	1386	1.5	Yes
UCOV 6.16	586	1586	1.5	Yes
UCOV 6.18	586	1786	1.5	Yes
UCOV 6.20	586	1986	1.5	Yes
UCOV 6.22	586	2186	1.5	Yes
UCOV 8.8	786	786	2.0	Yes
UCOV 8.10	786	986	2.0	Yes
UCOV 8.12	786	1186	2.0	Yes
UCOV 8.14	786	1386	2.0	Yes
UCOV 8.16	786	1586	2.0	Yes
UCOV 8.18	786	1786	2.0	Yes
UCOV 8.20	786	1986	2.0	Yes
UCOV 8.22	786	2186	2.0	Yes

© 1997-2024 ELSTEEL. All Right Reserved

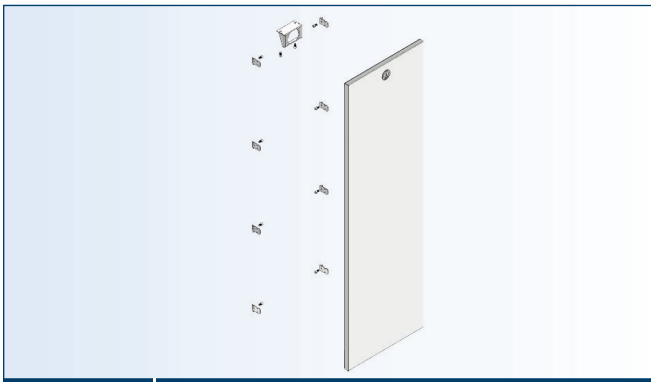

SCREWLESS COVER

CAT. No.	DESCRIPTION	SIZE (W×H)	WEIGHT (kg)	ORDER No. RAL 7035 FTF.
USCWC 2.2	SCREWLESS COVER	200 × 200	1.17	U35507
USCWC 2.4	SCREWLESS COVER	200 × 400	1.77	U35517
USCWC 2.6	SCREWLESS COVER	200 × 600	2.42	U35527
USCWC 2.8	SCREWLESS COVER	200 × 800	3.09	U35537
USCWC 2.10	SCREWLESS COVER	200 × 1000	3.61	U35547
USCWC 2.12	SCREWLESS COVER	200 × 1200	4.27	U35557
USCWC 2.14	SCREWLESS COVER	200 × 1400	4.96	U35567
USCWC 2.16	SCREWLESS COVER	200 × 1600	5.58	U35577
USCWC 2.18	SCREWLESS COVER	200 × 1800	6.17	U35587
USCWC 2.20	SCREWLESS COVER	200 × 2000	6.85	U35597
USCWC 2.22	SCREWLESS COVER	200 × 2200	9.27	U35607
USCWC 4.2	SCREWLESS COVER	400 × 200	1.77	U35617
USCWC 4.3	SCREWLESS COVER	400 × 300	2.33	U35627
USCWC 4.4	SCREWLESS COVER	400 × 400	2.97	U35637
USCWC 4.6	SCREWLESS COVER	400 × 600	4.06	U35647
USCWC 4.8	SCREWLESS COVER	400 × 800	5.21	U35657
USCWC 4.10	SCREWLESS COVER	400 × 1000	6.38	U35667
USCWC 4.12	SCREWLESS COVER	400 × 1200	7.14	U35677
USCWC 4.14	SCREWLESS COVER	400 × 1400	8.26	U35687
USCWC 4.16	SCREWLESS COVER	400 × 1600	9.65	U35697
USCWC 4.18	SCREWLESS COVER	400 × 1800	10.61	U35707
USCWC 4.20	SCREWLESS COVER	400 × 2000	11.81	U35717
USCWC 4.22	SCREWLESS COVER	400 × 2200	12.97	U35727
USCWC 6.2	SCREWLESS COVER	600 × 200	2.42	U35737
USCWC 6.3	SCREWLESS COVER	600 × 300	3.32	U35747
USCWC 6.4	SCREWLESS COVER	600 × 400	4.06	U35757
USCWC 6.6	SCREWLESS COVER	600 × 600	5.68	U35767
USCWC 6.8	SCREWLESS COVER	600 × 800	7.22	U35777
USCWC 6.10	SCREWLESS COVER	600 × 1000	8.94	U35787
USCWC 6.12	SCREWLESS COVER	600 × 1200	10.72	U35797
USCWC 6.14	SCREWLESS COVER	600 × 1400	12.14	U35807
USCWC 6.16	SCREWLESS COVER	600 × 1600	13.83	U35817
USCWC 6.18	SCREWLESS COVER	600 × 1800	15.40	U35827
USCWC 6.20	SCREWLESS COVER	600 × 2000	16.94	U35837
USCWC 6.22	SCREWLESS COVER	600 × 2200	18.55	U35847
USCWC 8.2	SCREWLESS COVER	800 × 200	3.09	U35857
USCWC 8.3	SCREWLESS COVER	800 × 300	4.63	U35867
USCWC 8.4	SCREWLESS COVER	800 × 400	5.21	U35877
USCWC 8.6	SCREWLESS COVER	800 × 600	7.22	U35887
USCWC 8.8	SCREWLESS COVER	800 × 800	9.56	U35897
USCWC 8.10	SCREWLESS COVER	800 × 1000	12.00	U35907
USCWC 8.12	SCREWLESS COVER	800 × 1200	13.07	U35917
USCWC 8.14	SCREWLESS COVER	800 × 1400	15.81	U35927
USCWC 8.16	SCREWLESS COVER	800 × 1600	17.56	U35937
USCWC 8.18	SCREWLESS COVER	800 × 1800	19.91	U35947
USCWC 8.20	SCREWLESS COVER	800 × 2000	22.12	U35957
USCWC 8.22	SCREWLESS COVER	800 × 2200	24.24	U35967

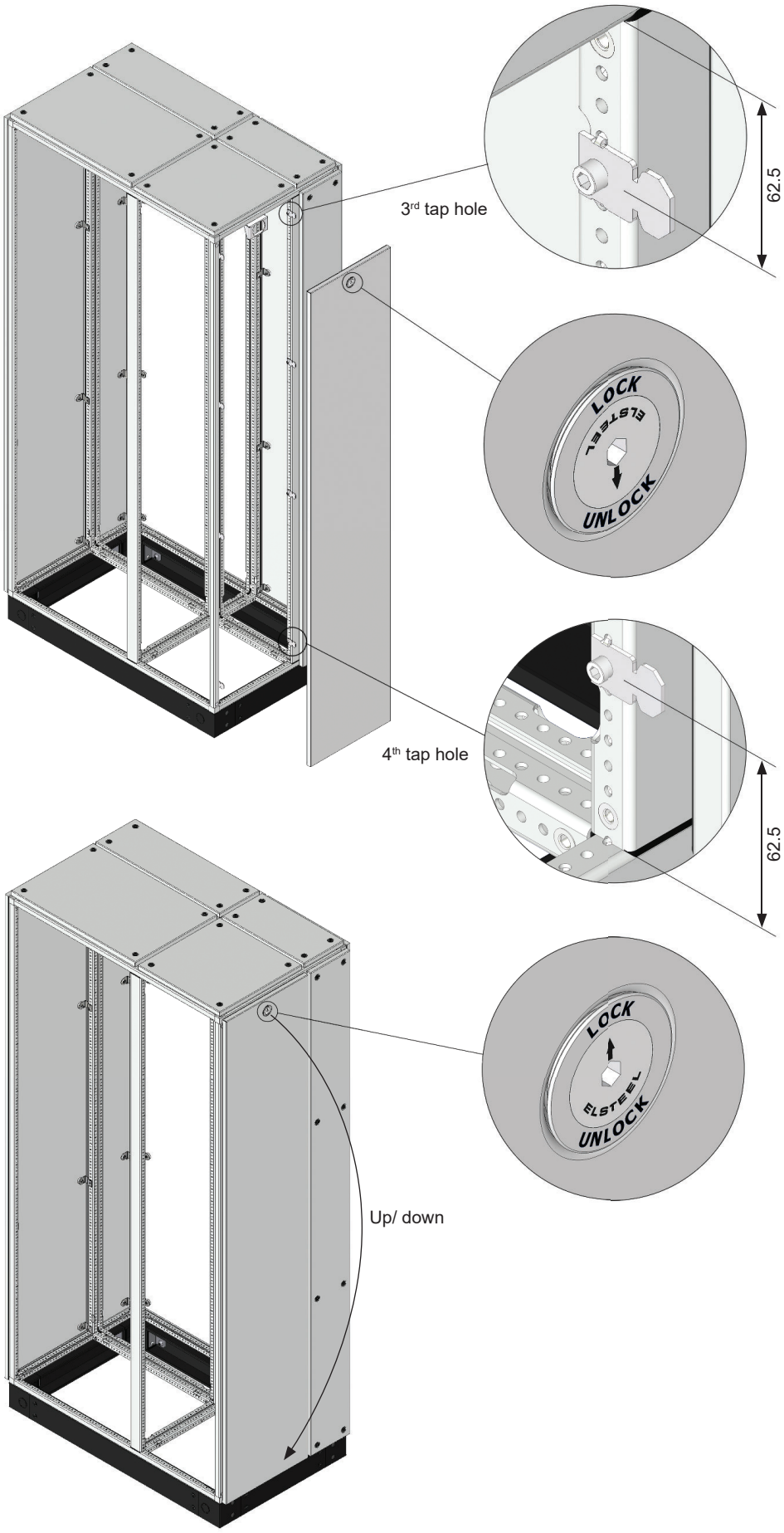

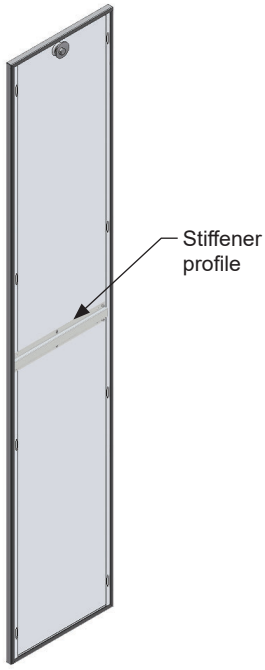

TECHNICAL INFORMATION

TYPE	SIZE		SHEET THICKNESS
	W	H	
USCWC 2.2	186	186	1.5
USCWC 2.4	186	386	1.5
USCWC 2.6	186	586	1.5
USCWC 2.8	186	786	1.5
USCWC 2.10	186	986	1.5
USCWC 2.12	186	1186	1.5
USCWC 2.14	186	1386	1.5
USCWC 2.16	186	1586	1.5
USCWC 2.18	186	1786	1.5
USCWC 2.20	186	1986	1.5
USCWC 2.22	186	2186	1.5
USCWC 4.2	386	186	1.5
USCWC 4.3	386	286	1.5
USCWC 4.4	386	386	1.5
USCWC 4.6	386	586	1.5
USCWC 4.8	386	786	1.5
USCWC 4.10	386	986	1.5
USCWC 4.12	386	1186	1.5
USCWC 4.14	386	1386	1.5
USCWC 4.16	386	1586	1.5
USCWC 4.18	386	1786	1.5
USCWC 4.20	386	1986	1.5
USCWC 4.22	386	2186	1.5
USCWC 6.2	586	186	1.5
USCWC 6.3	586	286	1.5
USCWC 6.4	586	386	1.5
USCWC 6.6	586	586	1.5
USCWC 6.8	586	786	1.5
USCWC 6.10	586	986	1.5
USCWC 6.12	586	1186	1.5
USCWC 6.14	586	1386	1.5
USCWC 6.16	586	1586	1.5
USCWC 6.18	586	1786	1.5
USCWC 6.20	586	1986	1.5
USCWC 6.22	586	2186	1.5
USCWC 8.2	786	186	2.0
USCWC 8.3	786	286	2.0
USCWC 8.4	786	386	2.0
USCWC 8.6	786	586	2.0
USCWC 8.8	786	786	2.0
USCWC 8.10	786	986	2.0
USCWC 8.12	786	1186	2.0
USCWC 8.14	786	1386	2.0
USCWC 8.16	786	1586	2.0
USCWC 8.18	786	1786	2.0
USCWC 8.20	786	1986	2.0
USCWC 8.22	786	2186	2.0

© 1997-2024 ELSTEEL. All Right Reserved

WITHOUT GASKET

FLAT COVER

1.5mm

CAT. No.	DESCRIPTION	SIZE (W×H)	WEIGHT (kg)	ORDER No. WITHOUT GASKET RAL 7035 FTF.
UFC 2.2	FLAT COVER	200 × 200	0.43	U13744
UFC 2.4	FLAT COVER	200 × 400	0.88	U13754
UFC 2.6	FLAT COVER	200 × 600	1.34	U13764
UFC 2.8	FLAT COVER	200 × 800	1.76	U13774
UFC 2.10	FLAT COVER	200 × 1000	2.20	U13784
UFC 2.12	FLAT COVER	200 × 1200	2.64	U13794
UFC 2.14	FLAT COVER	200 × 1400	3.18	U13804
UFC 2.16	FLAT COVER	200 × 1600	3.68	U13814
UFC 2.18	FLAT COVER	200 × 1800	4.02	U13824
UFC 2.20	FLAT COVER	200 × 2000	4.45	U13834
UFC 2.22	FLAT COVER	200 × 2200	5.30	U13844
UFC 4.4	FLAT COVER	400 × 400	1.76	U13864
UFC 4.6	FLAT COVER	400 × 600	2.65	U13874
UFC 4.8	FLAT COVER	400 × 800	3.52	U13884
UFC 4.10	FLAT COVER	400 × 1000	4.40	U13894
UFC 4.12	FLAT COVER	400 × 1200	5.28	U13904
UFC 4.14	FLAT COVER	400 × 1400	6.16	U13914
UFC 4.16	FLAT COVER	400 × 1600	7.24	U13924
UFC 4.18	FLAT COVER	400 × 1800	7.98	U13934
UFC 4.20	FLAT COVER	400 × 2000	9.03	U13944
UFC 4.22	FLAT COVER	400 × 2200	9.98	U13954
UFC 6.6	FLAT COVER	600 × 600	4.20	U13974
UFC 6.8	FLAT COVER	600 × 800	5.70	U13984
UFC 6.10	FLAT COVER	600 × 1000	6.90	U13994
UFC 6.12	FLAT COVER	600 × 1200	8.25	U14004
UFC 6.14	FLAT COVER	600 × 1400	9.71	U14014
UFC 6.16	FLAT COVER	600 × 1600	11.25	U14024
UFC 6.18	FLAT COVER	600 × 1800	12.51	U14034
UFC 6.20	FLAT COVER	600 × 2000	14.10	U14044
UFC 6.22	FLAT COVER	600 × 2200	15.56	U14054
UFC 8.8	FLAT COVER	800 × 800	7.31	U14074
UFC 8.10	FLAT COVER	800 × 1000	9.28	U14084
UFC 8.12	FLAT COVER	800 × 1200	11.13	U14094
UFC 8.14	FLAT COVER	800 × 1400	13.21	U14104
UFC 8.16	FLAT COVER	800 × 1600	14.83	U14114
UFC 8.18	FLAT COVER	800 × 1800	15.27	U14124
UFC 8.20	FLAT COVER	800 × 2000	15.71	U14134
UFC 8.22	FLAT COVER	800 × 2200	22.05	U14144

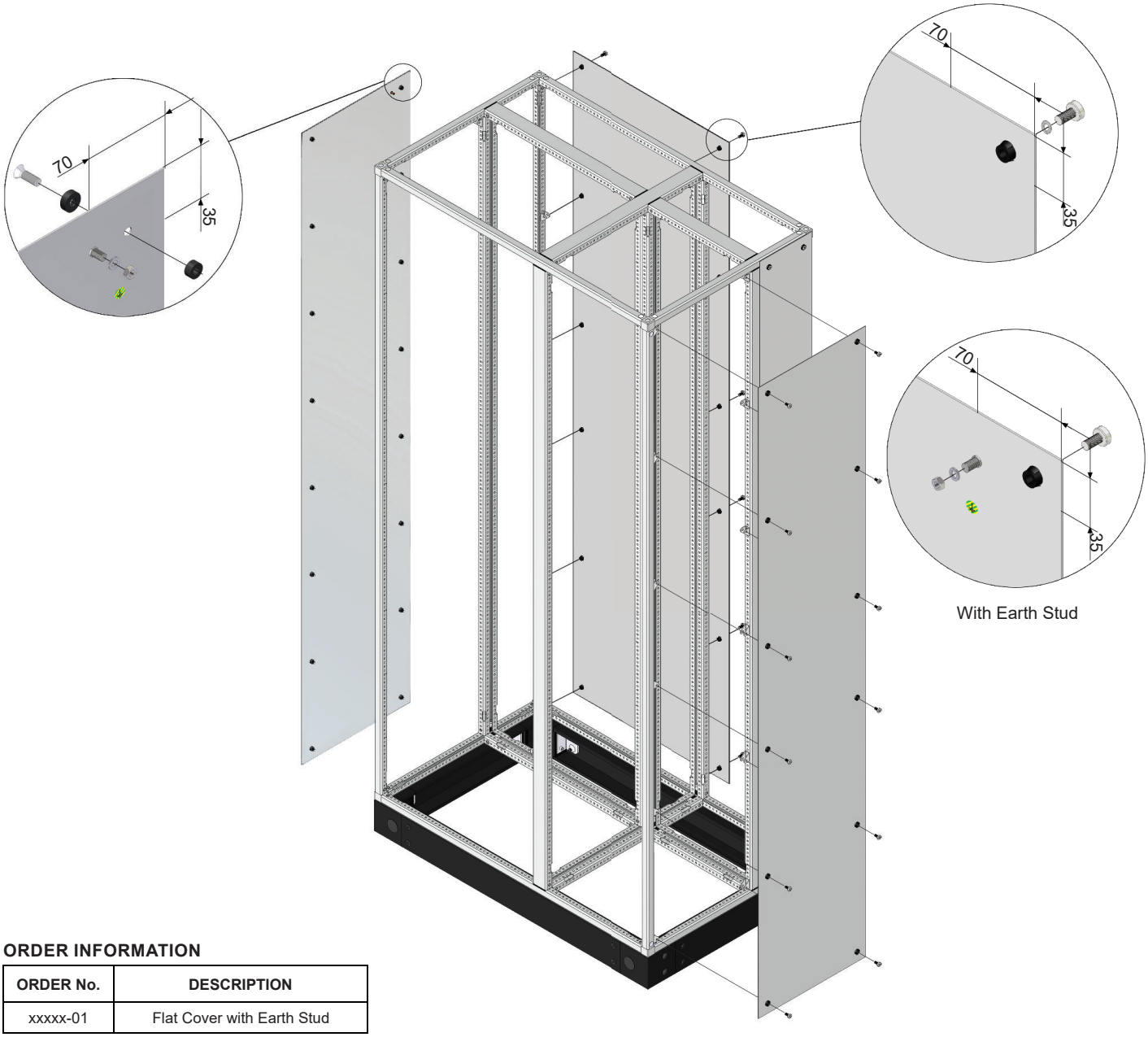

ORDER INFORMATION

ORDER No.	DESCRIPTION
xxxxx-01	Flat Cover with Earth Stud

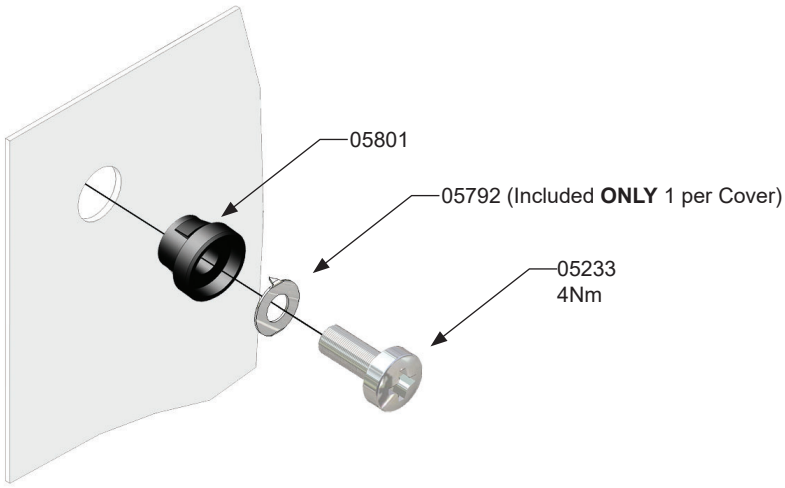

© 1997-2024 ELSTEEL. All Right Reserved

LOUVRE COVERS

CAT. No.	DESCRIPTION	SIZE (W×H)	WEIGHT (kg)	VERSION 3 ORDER No. RAL 7035 FTF.
UILC 2.2	LOUVRE COVER	200 × 200	0.86	U14927
UILC 4.2	LOUVRE COVER	400 × 200	1.79	U14937
UILC 6.2	LOUVRE COVER	600 × 200	2.52	U14947
UILC 8.2	LOUVRE COVER	800 × 200	3.58	U14957
UILC 10.2	LOUVRE COVER	1000 × 200	4.33	U14967

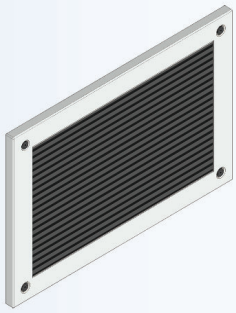

LOUVRE COVERS

CAT. No.	DESCRIPTION	SIZE (W×H)	WEIGHT (kg)	VERSION 3 ORDER No. RAL 7035 FTF.
UILC 4.4	LOUVRE COVER	400 × 400	3.60	U14977
UILC 6.4	LOUVRE COVER	600 × 400	5.00	U14987
UILC 8.4	LOUVRE COVER	800 × 400	7.16	U14997
UILC10.4	LOUVRE COVER	1000 × 400	8.98	U15007

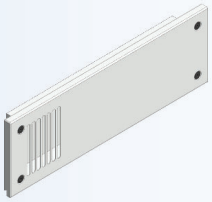

LOUVRE COVERS

CAT. No.	DESCRIPTION	SIZE (W×H)	WEIGHT (kg)	VERSION 3 ORDER No. RAL 7035 FTF.
ULCO 4.2	LOUVRE COVER IP44	400 × 200	2.17	U17707
ULCO 6.2	LOUVRE COVER IP44	600 × 200	3.49	U17717
ULCO 8.2	LOUVRE COVER IP44	800 × 200	4.34	U17727

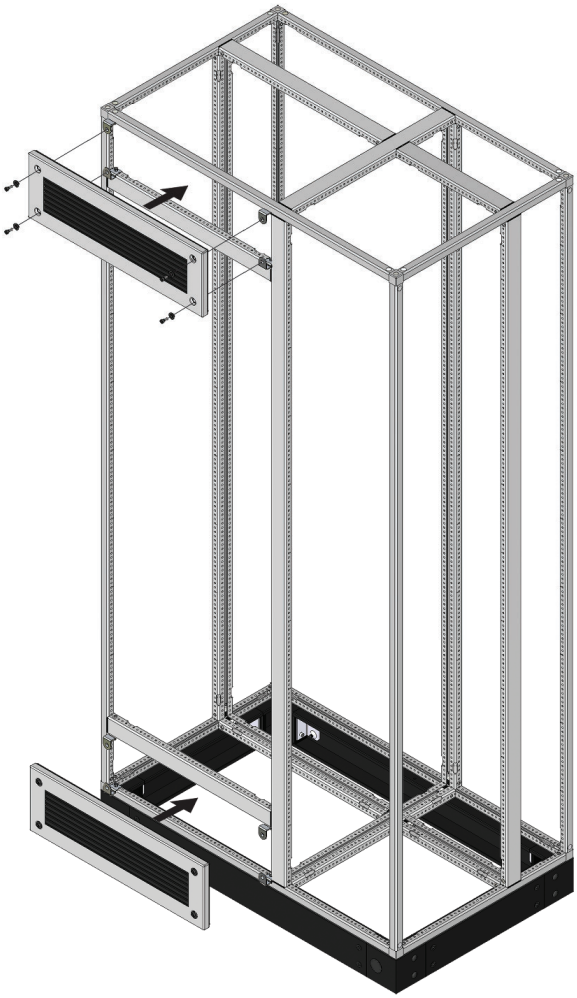

© 1997-2024 ELSTEEL. All Right Reserved

MOUNTING PLATE

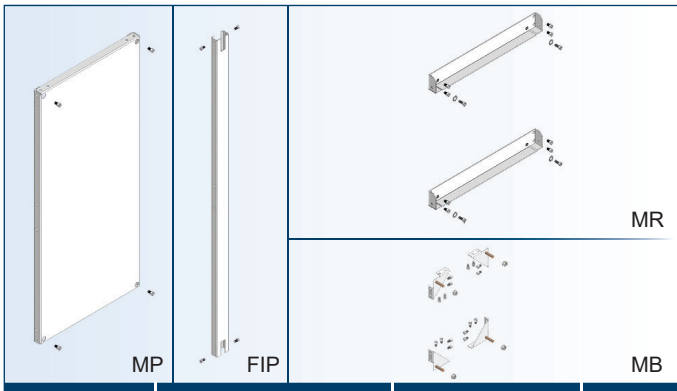

CAT. No.	DESCRIPTION	NOMINAL SIZE (W×H)	ACTUAL SIZE (W×H)	WEIGHT (kg)	ORDER No. Alu-zinc	ORDER No. RAL 9010 SMF.
UMP 4.2	MOUNTING PLATE	400 × 200	348 × 148	1.18	U12572	U12570
UMP 4.3	MOUNTING PLATE	400 × 300	348 × 248	1.87	U12577	U12575
UMP 4.4	MOUNTING PLATE	400 × 400	348 × 348	2.56	U12582	U12580
UMP 4.6	MOUNTING PLATE	400 × 600	348 × 548	3.57	U12595	U12590
UMP 4.8	MOUNTING PLATE	400 × 800	348 × 748	5.36	U12605	U12600
UMP 4.10	MOUNTING PLATE	400 × 1000	348 × 948	6.61	U12615	U12610
UMP 4.12	MOUNTING PLATE	400 × 1200	348 × 1148	7.96	U12625	U12620
UMP 4.14	MOUNTING PLATE	400 × 1400	348 × 1348	9.41	U12635	U12630
UMP 4.16	MOUNTING PLATE	400 × 1600	348 × 1548	10.90	U12645	U12640
UMP 4.18	MOUNTING PLATE	400 × 1800	348 × 1748	12.20	U12655	U12650
UMP 4.20	MOUNTING PLATE	400 × 2000	348 × 1948	13.49	U12662	U12660
UMP 6.6	MOUNTING PLATE	600 × 600	548 × 548	5.82	U12705	U12700
UMP 6.8	MOUNTING PLATE	600 × 800	548 × 748	7.84	U12715	U12710
UMP 6.10	MOUNTING PLATE	600 × 1000	548 × 948	9.73	U12725	U12720
UMP 6.12	MOUNTING PLATE	600 × 1200	548 × 1148	11.74	U12735	U12730
UMP 6.14	MOUNTING PLATE	600 × 1400	548 × 1348	13.81	U12745	U12740
UMP 6.16	MOUNTING PLATE	600 × 1600	548 × 1548	15.88	U12755	U12750
UMP 6.18	MOUNTING PLATE	600 × 1800	548 × 1748	18.09	U12765	U12760
UMP 6.20	MOUNTING PLATE	600 × 2000	548 × 1948	19.85	U12772	U12770
UMP 8.8	MOUNTING PLATE	800 × 800	748 × 748	10.49	U12795	U12790
UMP 8.10	MOUNTING PLATE	800 × 1000	748 × 948	13.76	U12805	U12800
UMP 8.12	MOUNTING PLATE	800 × 1200	748 × 1148	16.55	U12815	U12810
UMP 8.14	MOUNTING PLATE	800 × 1400	748 × 1348	15.80	U12825	U12820
UMP 8.16	MOUNTING PLATE	800 × 1600	748 × 1548	22.14	U12835	U12830
UMP 8.18	MOUNTING PLATE	800 × 1800	748 × 1748	24.93	U12845	U12840
UMP 8.20	MOUNTING PLATE	800 × 2000	748 × 1948	27.00	U12855	U12850

CAT. No.	DESCRIPTION	WEIGHT (kg)	ORDER No. Alu-zinc	ORDER No. RAL 9010 SMF.
UFIP 18	FILLER PROFILE 1800	2.82	U13035	U13030
UFIP 20	FILLER PROFILE 2000	3.39	U13045	U13040

CAT. No.	DESCRIPTION	WEIGHT (kg)	ORDER No. Alu-zinc	ORDER No. RAL 9010 SMF.
UMR 4	MOUNTING RAILS 400	0.99	U12985	U12980
UMR 6	MOUNTING RAILS 600	1.49	U12995	U12990
UMR 8	MOUNTING RAILS 800	1.94	U13005	U13000

CAT. No.	DESCRIPTION	WEIGHT (kg)	ORDER No. RAL 9010 SMF.
UMB	MOUNTING BRACKETS	0.38	U98317

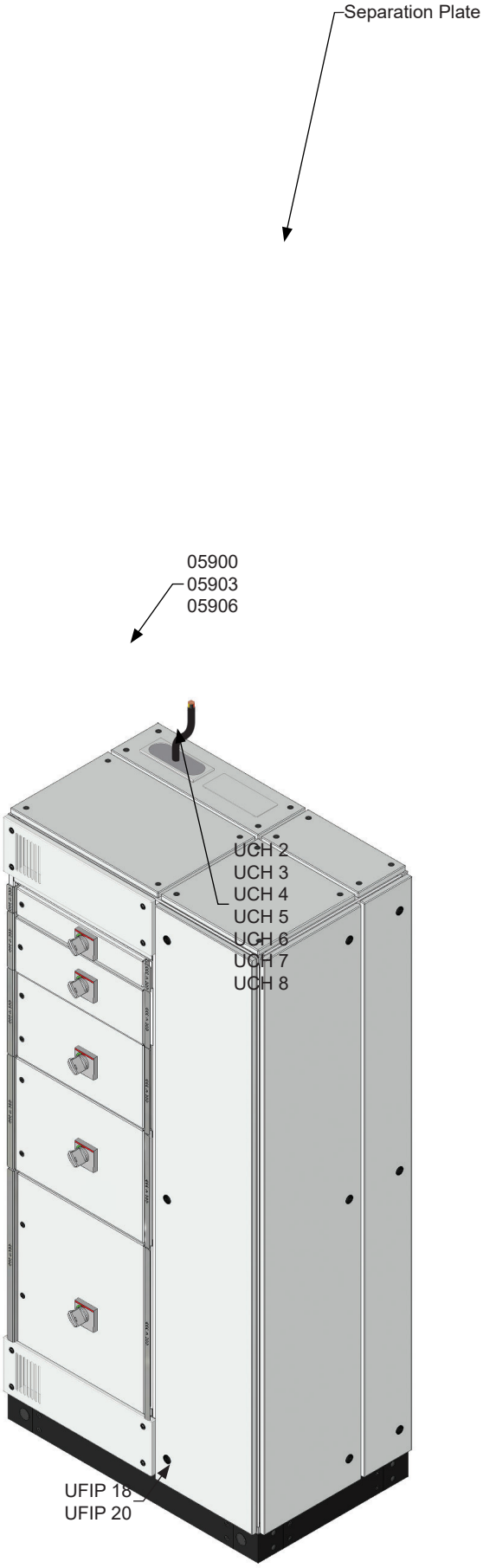

© 1997-2024 ELSTEEL. All Right Reserved

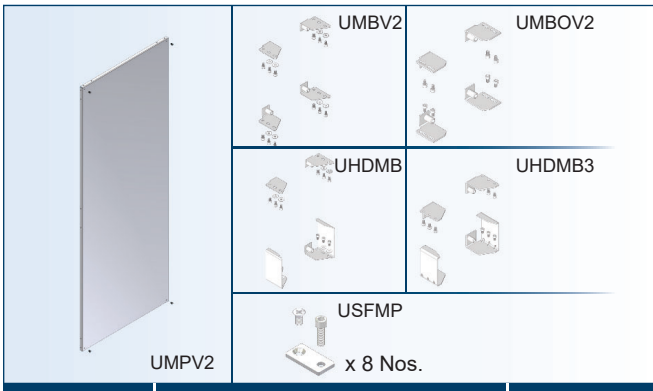

MOUNTING PLATES VERSION 2

CAT. No.	DESCRIPTION	NOMINAL SIZE (W×H)	ACTUAL SIZE (W×H)	WEIGHT (kg)	ORDER No. Alu-zinc	ORDER No. HEAVY DUTY Electro Hot Galvanized
UMPV2 2.2	MOUNTING PLATE - V2	200 × 200	143 × 143	0.52	U19430	-
UMPV2 2.4	MOUNTING PLATE - V2	200 × 400	143 × 343	0.84	U19431	-
UMPV2 2.6	MOUNTING PLATE - V2	200 × 600	143 × 543	2.14	U19432	-
UMPV2 2.8	MOUNTING PLATE - V2	200 × 800	143 × 743	3.45	U19433	-
UMPV2 2.10	MOUNTING PLATE - V2	200 × 1000	143 × 943	4.72	U19434	-
UMPV2 2.12	MOUNTING PLATE - V2	200 × 1200	143 × 1143	6.02	U19435	-
UMPV2 2.14	MOUNTING PLATE - V2	200 × 1400	143 × 1343	7.38	U19436	-
UMPV2 2.16	MOUNTING PLATE - V2	200 × 1600	143 × 1543	8.69	U19437	-
UMPV2 2.18	MOUNTING PLATE - V2	200 × 1800	143 × 1743	9.92	U19438	-
UMPV2 2.20	MOUNTING PLATE - V2	200 × 2000	143 × 1943	11.26	U19439	-
UMPV2 4.3	MOUNTING PLATE - V2	400 × 300	343 × 243	1.50	U19461	-
UMPV2 4.4	MOUNTING PLATE - V2	400 × 400	343 × 343	2.16	U19462	-
UMPV2 4.6	MOUNTING PLATE - V2	400 × 600	343 × 543	3.47	U19463	-
UMPV2 4.8	MOUNTING PLATE - V2	400 × 800	343 × 743	4.78	U19464	-
UMPV2 4.10	MOUNTING PLATE - V2	400 × 1000	343 × 943	6.09	U19465	-
UMPV2 4.12	MOUNTING PLATE - V2	400 × 1200	343 × 1143	7.40	U19466	-
UMPV2 4.14	MOUNTING PLATE - V2	400 × 1400	343 × 1343	8.71	U19467	-
UMPV2 4.16	MOUNTING PLATE - V2	400 × 1600	343 × 1543	10.02	U19468	-
UMPV2 4.18	MOUNTING PLATE - V2	400 × 1800	343 × 1743	11.33	U19469	-
UMPV2 4.20	MOUNTING PLATE - V2	400 × 2000	343 × 1943	12.64	U19470	-
UMPV2 6.6	MOUNTING PLATE - V2	600 × 600	543 × 543	5.43	U19471	-
UMPV2 6.8	MOUNTING PLATE - V2	600 × 800	543 × 743	7.41	U19472	-
UMPV2 6.10	MOUNTING PLATE - V2	600 × 1000	543 × 943	9.37	U19473	-
UMPV2 6.12	MOUNTING PLATE - V2	600 × 1200	543 × 1143	11.33	U19474	-
UMPV2 6.14	MOUNTING PLATE - V2	600 × 1400	543 × 1343	13.31	U19475	-
UMPV2 6.16	MOUNTING PLATE - V2	600 × 1600	543 × 1543	15.27	U19476	-
UMPV2 6.18	MOUNTING PLATE - V2	600 × 1800	543 × 1743	17.23	U19477	-
UMPV2 6.20	MOUNTING PLATE - V2	600 × 2000	543 × 1943	19.21	U19478	U19495
UMPV2 6.22	MOUNTING PLATE - V2	600 × 2200	543 × 2143	21.19	U19486	U19502
UMPV2 8.8	MOUNTING PLATE - V2	800 × 800	743 × 743	10.02	U19479	-
UMPV2 8.10	MOUNTING PLATE - V2	800 × 1000	743 × 943	12.64	U19480	-
UMPV2 8.12	MOUNTING PLATE - V2	800 × 1200	743 × 1143	15.27	U19481	-
UMPV2 8.14	MOUNTING PLATE - V2	800 × 1400	743 × 1343	17.89	U19482	-
UMPV2 8.16	MOUNTING PLATE - V2	800 × 1600	743 × 1543	20.51	U19483	-
UMPV2 8.18	MOUNTING PLATE - V2	800 × 1800	743 × 1743	23.13	U19484	-
UMPV2 8.20	MOUNTING PLATE - V2	800 × 2000	743 × 1943	25.75	U19485	U19496
UMPV2 8.22	MOUNTING PLATE - V2	800 × 2200	743 × 2143	28.37	-	U19498
UMPV2 10.20	MOUNTING PLATE - V2	1000 × 2000	943 × 1943	46.96	-	U19499
UMPV2 10.22	MOUNTING PLATE - V2	1000 × 2200	943 × 2143	51.66	-	U19500
UMPV2 12.20	MOUNTING PLATE - V2	1200 × 2000	1143 ×1943	56.36	-	U19501
UMPV2 12.22	MOUNTING PLATE - V2	1200 × 2200	1143 × 2143	62.00	-	U19497

CAT. No.	DESCRIPTION	WEIGHT (kg)	ORDER No. Alu-zinc
UFIPV2 18	FILLER PROFILE 1800	2.99	U19515
UFIPV2 20	FILLER PROFILE 2000	3.35	U19516
UFIPV2 22	FILLER PROFILE 2200	3.71	U19517

CAT. No.	DESCRIPTION	WEIGHT (kg)	ORDER No. Zinc plated
UMBV2	MOUNTING BRACKETS	0.46	U19400
UMBOV2	MOUNTING BRACKETS WITH OVAL HOLES	0.46	U19493
UHDMB	HEAVY DUTY MOUNTING BRACKETS	0.82	U19491
UHDMB3	HEAVY DUTY MOUNTING BRACKETS FOR 3mm	0.98	U19492
USFMP	SPACER FOR MOUNTING PLATE	0.02	U19494

UMBV2

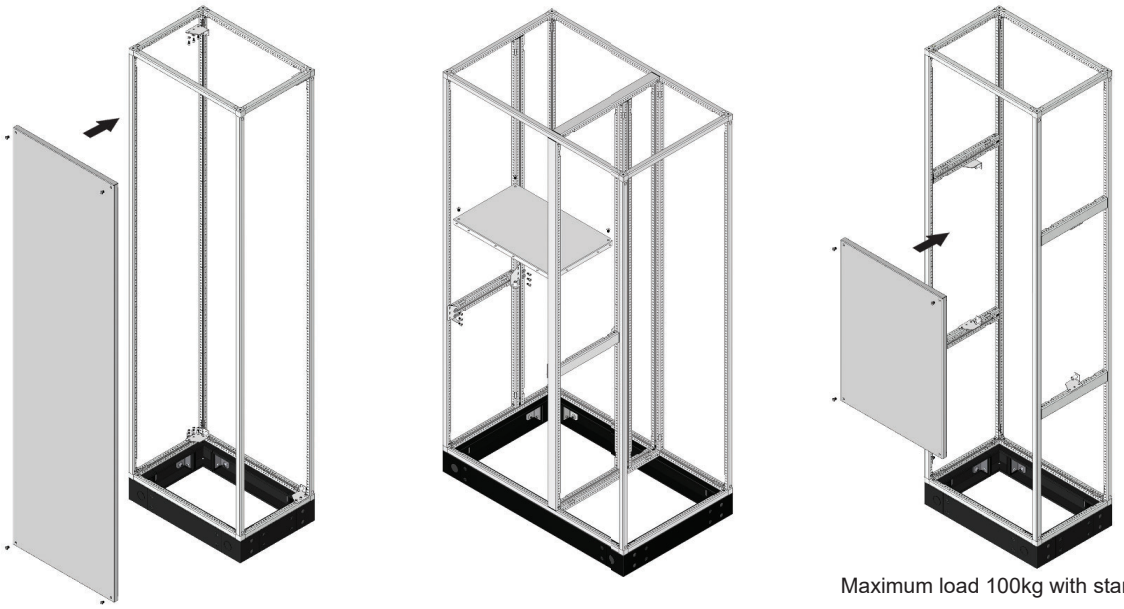

Maximum load 100kg with standard brackets.

UMBOV2

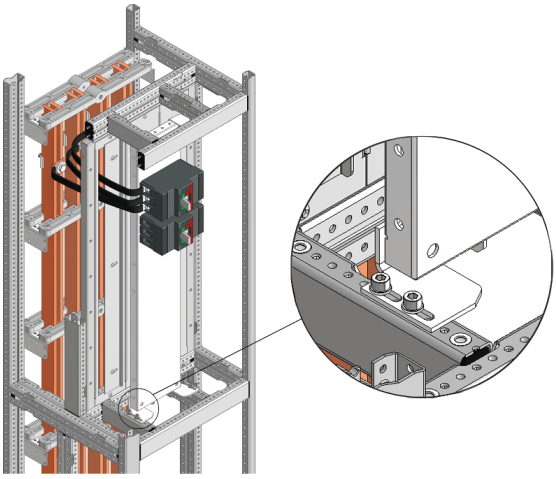

USFMP

Fixing from back side

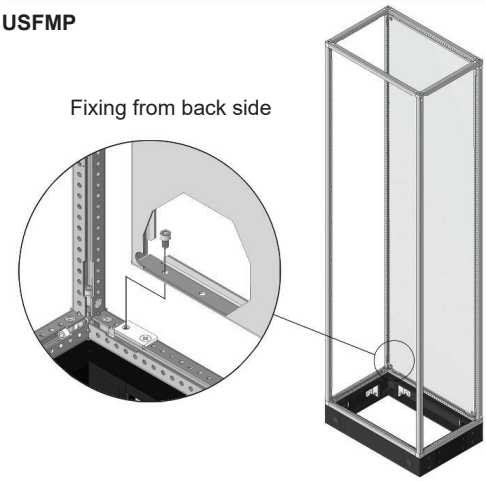

UHDMB
UHDMB3 When using heavy duty brackets, the top must be mounted with standard brackets.

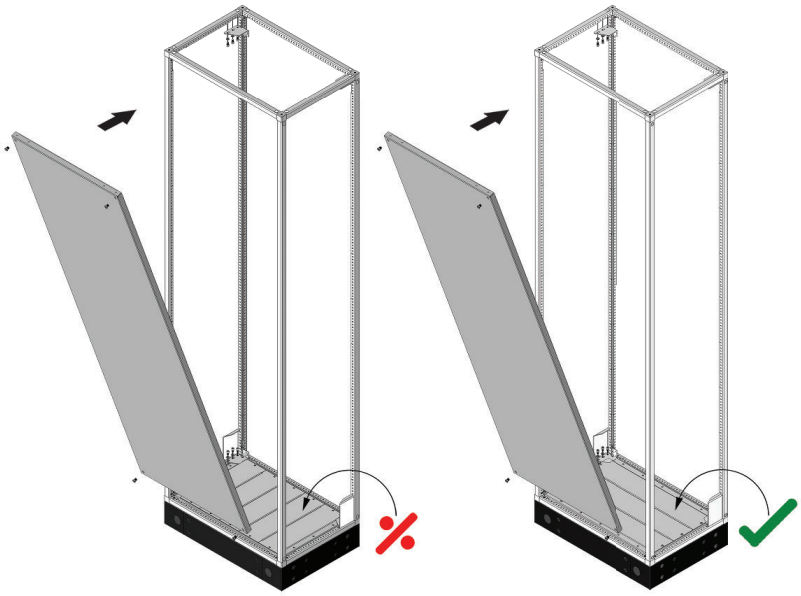

Maximum Load 250kg with heavy duty brackets.
Maximum Load 500kg with 3mm Mounting Plate & heavy duty brackets.

© 1997-2024 ELSTEEL. All Right Reserved

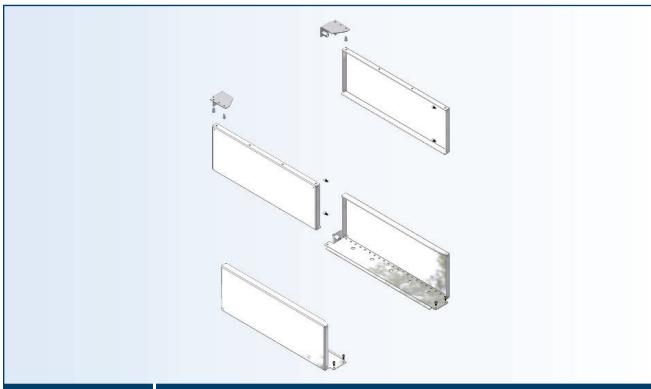

MOUNTING PLATE SLIDERS

CAT. No.	DESCRIPTION	LENGTH	WEIGHT (kg)	ORDER No. Electro Hot galvanized
UMPSLD 4	MOUNTING PLATE SLIDERS	400	1.28	U19510
UMPSLD 6	MOUNTING PLATE SLIDERS	600	1.92	U19511
UMPSLD 8	MOUNTING PLATE SLIDERS	800	2.56	U19512

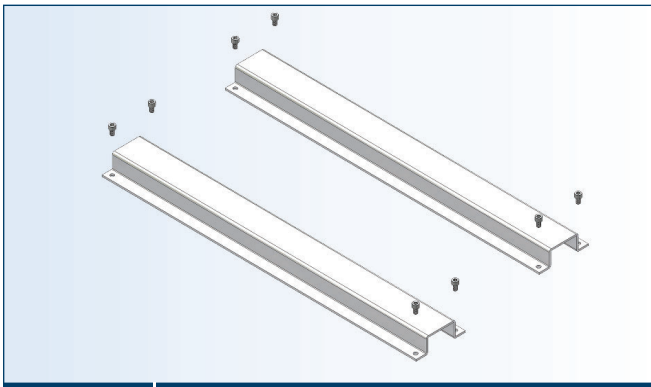

HEAVY DUTY SUPPORTS

CAT. No.	DESCRIPTION	LENGTH	WEIGHT (kg)	ORDER No. Electro Hot galvanized
UHDSU 4	HEAVY DUTY SUPPORTS	400	2.61	U19505
UHDSU 6	HEAVY DUTY SUPPORTS	600	3.92	U19506
UHDSU 8	HEAVY DUTY SUPPORTS	800	5.22	U19507

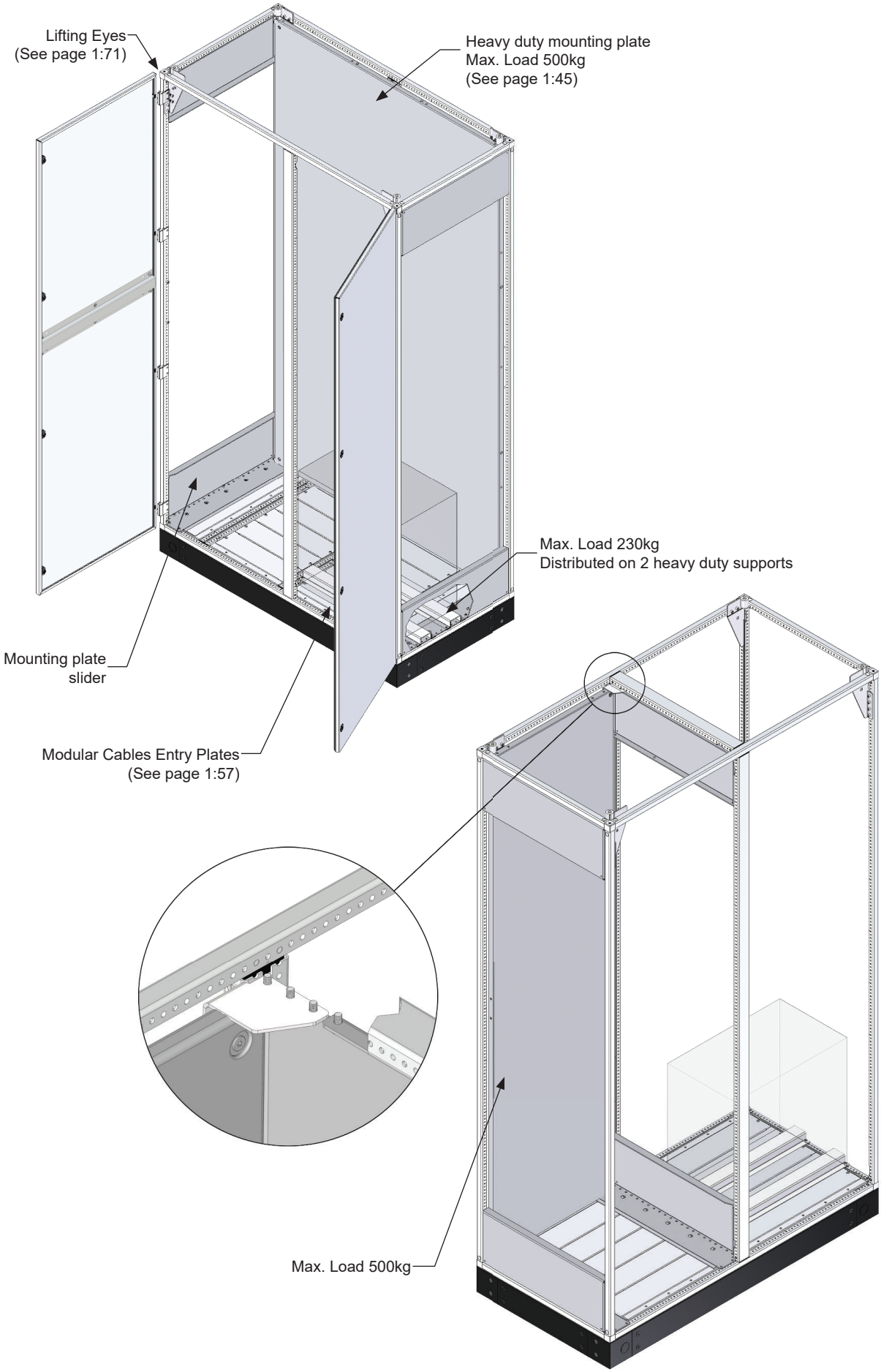

© 1997-2024 ELSTEEL. All Right Reserved

ACB MOUNTING PLATE

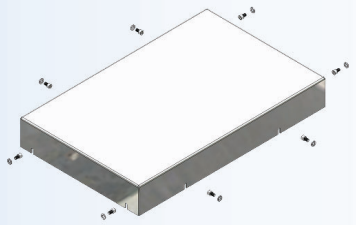

CAT. No.	DESCRIPTION	SIZE (W×D)	WEIGHT (kg)	ORDER No. Alu-zinc
UACM 4.4	ACB MOUNTING PLATE	400 × 400	3.38	U39220
UACM 6.4	ACB MOUNTING PLATE	600 × 400	4.87	U39221
UACM 8.4	ACB MOUNTING PLATE	800 × 400	6.26	U39222
UACM 10.4	ACB MOUNTING PLATE	1000 × 400	8.25	U39223
UACM 12.4	ACB MOUNTING PLATE	1200 × 400	9.72	U39222

ACB SUPPORT CHANNEL

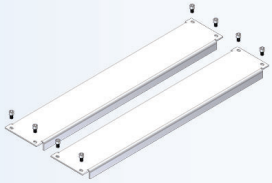

CAT. No.	DESCRIPTION	WEIGHT (kg)	ORDER No. RAL 9010
UASC 4	ACB SUPPORT CHANNEL 400	2.55	U98332
UASC 6	ACB SUPPORT CHANNEL 600	3.87	U98333
UASC 8	ACB SUPPORT CHANNEL 800	5.13	U98334

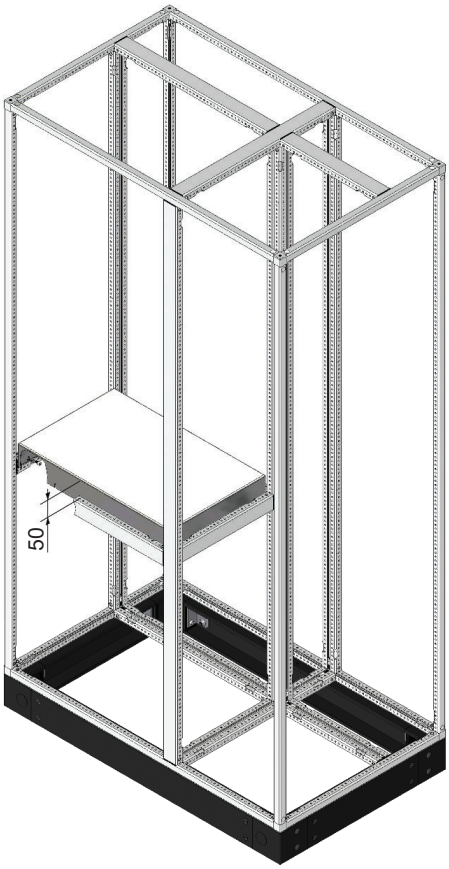

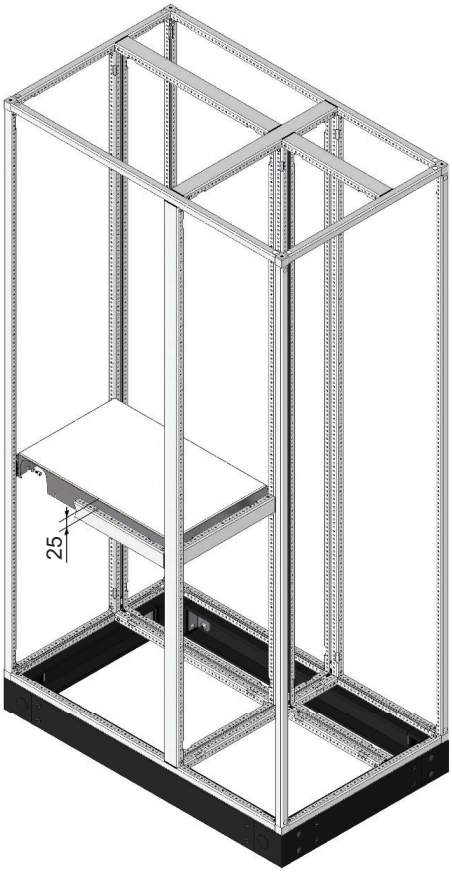

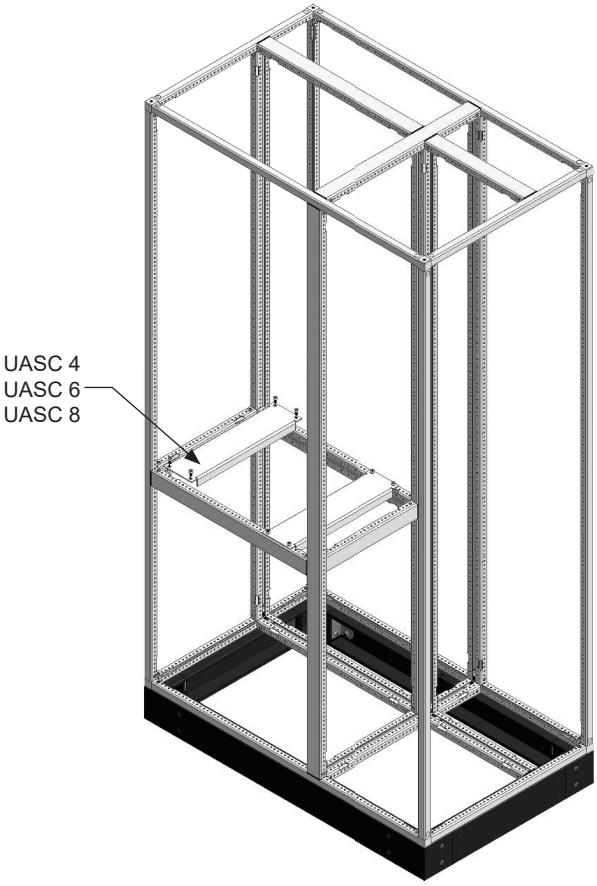

© 1997-2024 ELSTEEL. All Right Reserved

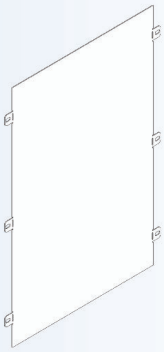

SEPARATION PLATE

CAT. No.	DESCRIPTION	SIZE (W×H)	WEIGHT (kg)	ORDER No. Alu-zinc	ORDER No. Mild Steel Painted RAL 9010 SMF.
USP 2.2	SEPARATION PLATE	200 × 200	2.30	U13077	U13072
USP 2.4	SEPARATION PLATE	200 × 400	0.53	U13087	U13082
USP 2.6	SEPARATION PLATE	200 × 600	0.67	U13097	U13092
USP 2.8	SEPARATION PLATE	200 × 800	1.10	U13107	U13102
USP 2.10	SEPARATION PLATE	200 × 1000	1.40	U13117	U13112
USP 2.12	SEPARATION PLATE	200 × 1200	1.70	U13127	U13122
USP 2.14	SEPARATION PLATE	200 × 1400	2.52	U13137	U13132
USP 2.16	SEPARATION PLATE	200 × 1600	3.00	U13147	U13142
USP 2.18	SEPARATION PLATE	200 × 1800	2.91	U13157	U13152
USP 2.20	SEPARATION PLATE	200 × 2000	3.81	U13163	U13161
USP 4.4	SEPARATION PLATE	400 × 400	0.99	U13187	U13182
USP 4.6	SEPARATION PLATE	400 × 600	1.59	U13197	U13192
USP 4.8	SEPARATION PLATE	400 × 800	2.60	U13207	U13202
USP 4.10	SEPARATION PLATE	400 × 1000	3.86	U13217	U13212
USP 4.12	SEPARATION PLATE	400 × 1200	4.12	U13227	U13222
USP 4.14	SEPARATION PLATE	400 × 1400	5.30	U13237	U13232
USP 4.16	SEPARATION PLATE	400 × 1600	5.26	U13247	U13242
USP 4.18	SEPARATION PLATE	400 × 1800	7.15	U13257	U13252
USP 4.20	SEPARATION PLATE	400 × 2000	7.25	U13263	U13261
USP 6.6	SEPARATION PLATE	600 × 600	2.96	U13287	U13282
USP 6.8	SEPARATION PLATE	600 × 800	3.97	U13297	U13292
USP 6.10	SEPARATION PLATE	600 × 1000	5.19	U13307	U13302
USP 6.12	SEPARATION PLATE	600 × 1200	7.21	U13317	U13312
USP 6.14	SEPARATION PLATE	600 × 1400	8.51	U13327	U13322
USP 6.16	SEPARATION PLATE	600 × 1600	8.81	U13337	U13332
USP 6.18	SEPARATION PLATE	600 × 1800	10.81	U13347	U13342
USP 6.20	SEPARATION PLATE	600 × 2000	11.89	U13353	U13351

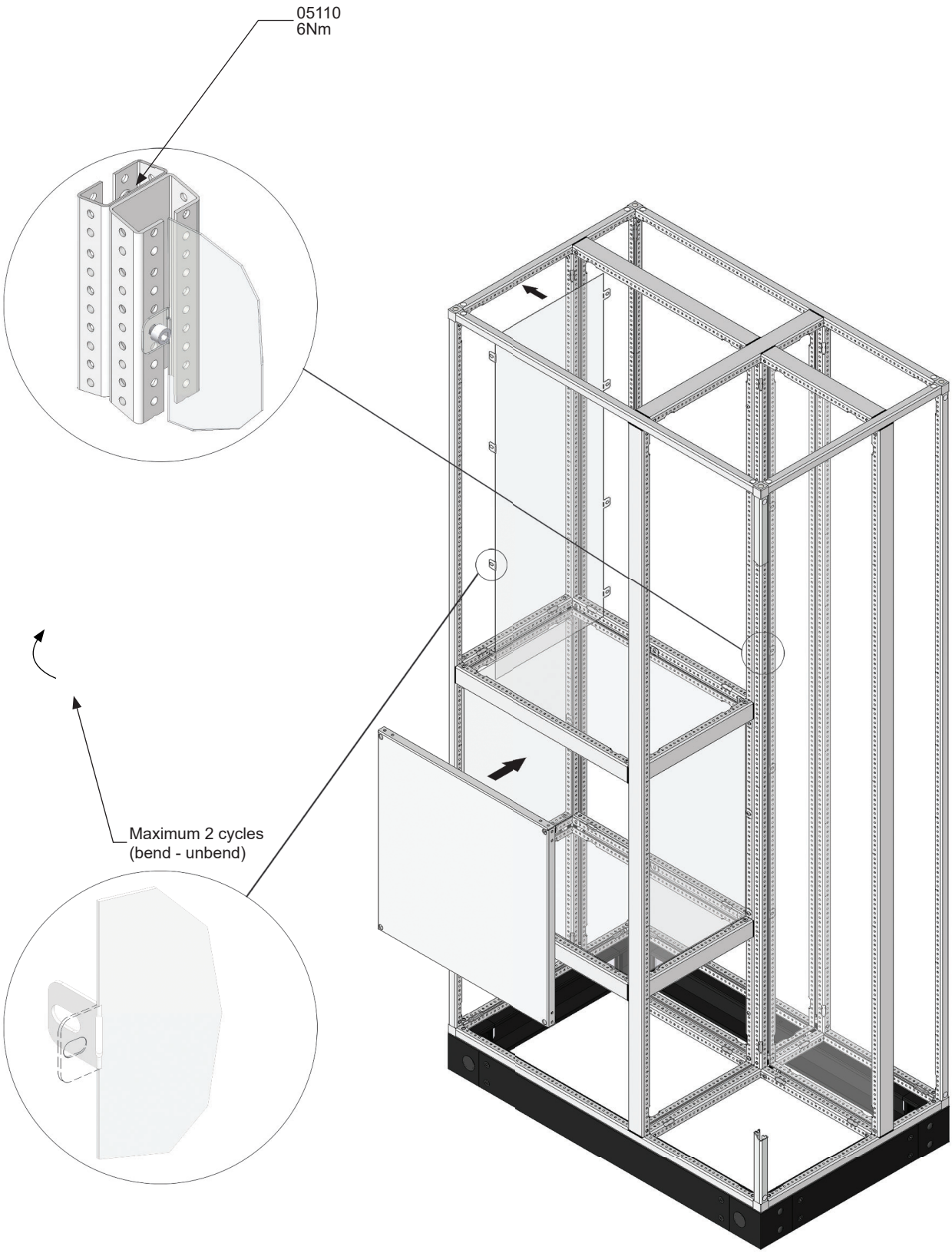

© 1997-2024 ELSTEEL. All Right Reserved

POLYCARBONATE SEPARATION PLATE

CAT. No.	DESCRIPTION	SIZE (W×H)	WEIGHT (kg)	ORDER No. Polycarbonate 2mm
UPSP 2.2	POLYCARBONATE SEPARATION PLATE	200 × 200	0.06	U16900
UPSP 2.4	POLYCARBONATE SEPARATION PLATE	200 × 400	0.13	U16903
UPSP 2.6	POLYCARBONATE SEPARATION PLATE	200 × 600	0.22	U16906
UPSP 2.8	POLYCARBONATE SEPARATION PLATE	200 × 800	0.27	U16909
UPSP 2.10	POLYCARBONATE SEPARATION PLATE	200 × 1000	0.33	U16912
UPSP 2.12	POLYCARBONATE SEPARATION PLATE	200 × 1200	0.43	U16915
UPSP 2.14	POLYCARBONATE SEPARATION PLATE	200 × 1400	0.52	U16918
UPSP 2.16	POLYCARBONATE SEPARATION PLATE	200 × 1600	0.60	U16921
UPSP 2.18	POLYCARBONATE SEPARATION PLATE	200 × 1800	0.67	U16924
UPSP 2.20	POLYCARBONATE SEPARATION PLATE	200 × 2000	0.75	U16927
UPSP 4.4	POLYCARBONATE SEPARATION PLATE	400 × 400	0.34	U16940
UPSP 4.6	POLYCARBONATE SEPARATION PLATE	400 × 600	0.50	U16943
UPSP 4.8	POLYCARBONATE SEPARATION PLATE	400 × 800	0.68	U16946
UPSP 4.10	POLYCARBONATE SEPARATION PLATE	400 × 1000	0.81	U16949
UPSP 4.12	POLYCARBONATE SEPARATION PLATE	400 × 1200	1.15	U16952
UPSP 4.14	POLYCARBONATE SEPARATION PLATE	400 × 1400	1.21	U16955
UPSP 4.16	POLYCARBONATE SEPARATION PLATE	400 × 1600	1.40	U16958
UPSP 4.18	POLYCARBONATE SEPARATION PLATE	400 × 1800	1.60	U16961
UPSP 4.20	POLYCARBONATE SEPARATION PLATE	400 × 2000	1.70	U16964
UPSP 6.6	POLYCARBONATE SEPARATION PLATE	600 × 600	0.79	U16970
UPSP 6.8	POLYCARBONATE SEPARATION PLATE	600 × 800	1.06	U16973
UPSP 6.10	POLYCARBONATE SEPARATION PLATE	600 × 1000	1.35	U16976
UPSP 6.12	POLYCARBONATE SEPARATION PLATE	600 × 1200	1.60	U16979
UPSP 6.14	POLYCARBONATE SEPARATION PLATE	600 × 1400	1.84	U16882
UPSP 6.16	POLYCARBONATE SEPARATION PLATE	600 × 1600	2.18	U16985
UPSP 6.18	POLYCARBONATE SEPARATION PLATE	600 × 1800	2.46	U16988
UPSP 6.20	POLYCARBONATE SEPARATION PLATE	600 × 2000	2.68	U16991

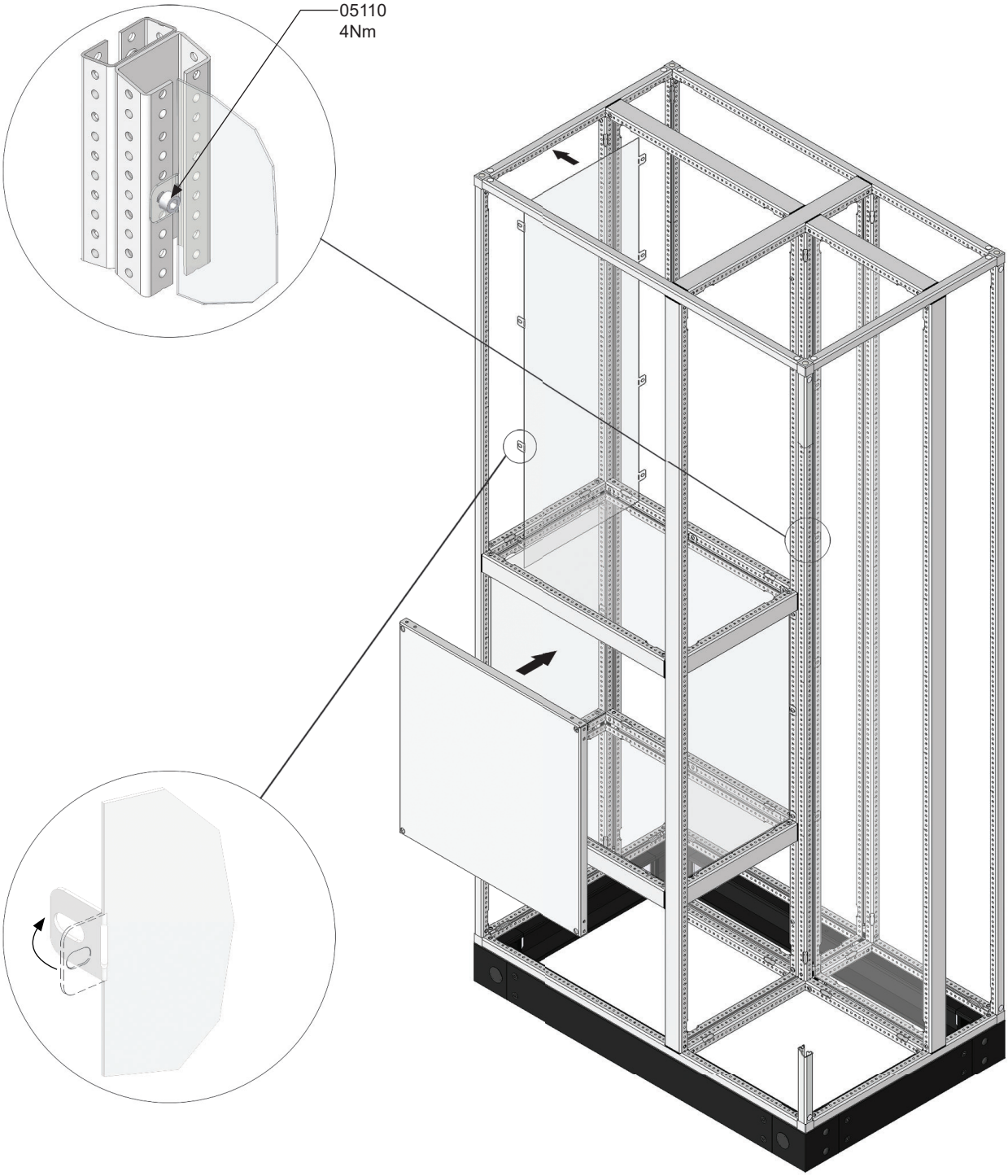

© 1997-2024 ELSTEEL. All Right Reserved

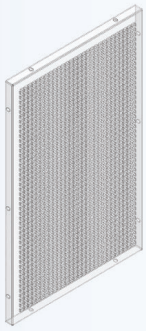

SEPARATION PLATE WITH VENTILATION

CAT. No.	DESCRIPTION	SIZE (W×H)	WEIGHT (kg)	ORDER No. Polycarbonate 2mm
UPSPC 2.2	SEPARATION PLATE WITH VENTILATION	200 × 200	0.07	U16901
UPSPC 2.4	SEPARATION PLATE WITH VENTILATION	200 × 400	0.14	U16904
UPSPC 2.6	SEPARATION PLATE WITH VENTILATION	200 × 600	0.21	U16907
UPSPC 2.8	SEPARATION PLATE WITH VENTILATION	200 × 800	0.28	U16910
UPSPC2.10	SEPARATION PLATE WITH VENTILATION	200 × 1000	0.35	U16913
UPSPC 2.12	SEPARATION PLATE WITH VENTILATION	200 × 1200	0.42	U16916
UPSPC 2.14	SEPARATION PLATE WITH VENTILATION	200 × 1400	0.49	U16919
UPSPC 2.16	SEPARATION PLATE WITH VENTILATION	200 × 1600	0.56	U16922
UPSPC 2.18	SEPARATION PLATE WITH VENTILATION	200 × 1800	0.62	U16925
UPSPC 2.20	SEPARATION PLATE WITH VENTILATION	200 × 2000	0.69	U16928
UPSPC 4.4	SEPARATION PLATE WITH VENTILATION	400 × 400	0.26	U16941
UPSPC 4.6	SEPARATION PLATE WITH VENTILATION	400 × 600	0.40	U16944
UPSPC 4.8	SEPARATION PLATE WITH VENTILATION	400 × 800	0.54	U16947
UPSPC 4.10	SEPARATION PLATE WITH VENTILATION	400 × 1000	0.69	U16950
UPSPC 4.12	SEPARATION PLATE WITH VENTILATION	400 × 1200	0.83	U16953
UPSPC 4.14	SEPARATION PLATE WITH VENTILATION	400 × 1400	0.96	U16956
UPSPC 4.16	SEPARATION PLATE WITH VENTILATION	400 × 1600	1.10	U16959
UPSPC 4.18	SEPARATION PLATE WITH VENTILATION	400 × 1800	1.24	U16962
UPSPC 4.20	SEPARATION PLATE WITH VENTILATION	400 × 2000	1.37	U16965
UPSPC 6.6	SEPARATION PLATE WITH VENTILATION	600 × 600	0.62	U16971
UPSPC 6.8	SEPARATION PLATE WITH VENTILATION	600 × 800	0.83	U16974
UPSPC 6.10	SEPARATION PLATE WITH VENTILATION	600 × 1000	1.03	U16977
UPSPC 6.12	SEPARATION PLATE WITH VENTILATION	600 × 1200	1.23	U16980
UPSPC 6.14	SEPARATION PLATE WITH VENTILATION	600 × 1400	1.44	U16983
UPSPC 6.16	SEPARATION PLATE WITH VENTILATION	600 × 1600	1.64	U16986
UPSPC 6.18	SEPARATION PLATE WITH VENTILATION	600 × 1800	1.85	U16989
UPSPC 6.20	SEPARATION PLATE WITH VENTILATION	600 × 2000	2.05	U16992

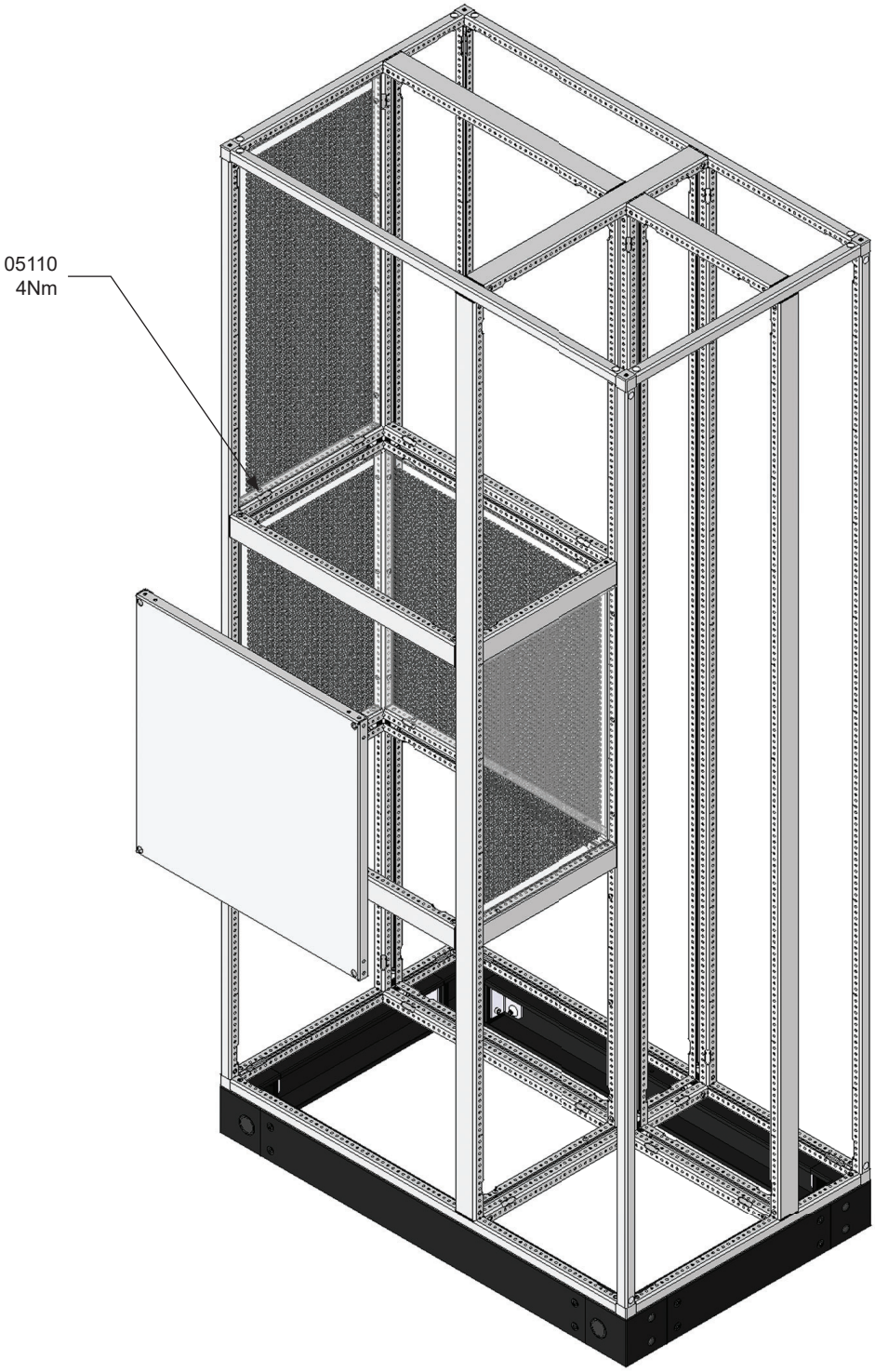

© 1997-2024 ELSTEEL. All Right Reserved

MODULAR CABLE ENTRY PLATE

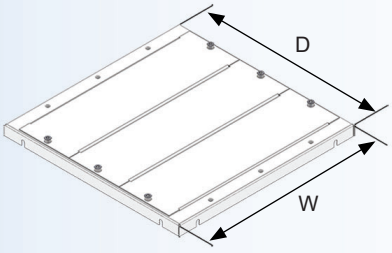

TYPE	DESCRIPTION	SIZE (W×D)	WEIGHT (kg)	ORDER No. Width Alu Zinc	ORDER No. RAL 9010 SMF.
UMCE 2.2	MODULAR CABLE ENTRY PLATE	200 × 200	0.43	U15381	U15380
UMCE 2.4	MODULAR CABLE ENTRY PLATE	200 × 400	2.00	U15391	U15390
UMCE 2.6	MODULAR CABLE ENTRY PLATE	200 × 600	1.34	U15396	U15395
UMCE 4.2	MODULAR CABLE ENTRY PLATE	400 × 200	0.88	U15401	U15400
UMCE 4.4	MODULAR CABLE ENTRY PLATE	400 × 400	2.00	U15411	U15410
UMCE 4.6	MODULAR CABLE ENTRY PLATE	400 × 600	3.15	U15421	U15420
UMCE 4.8	MODULAR CABLE ENTRY PLATE	400 × 800	3.33	U15423	U15422
UMCE 6.2	MODULAR CABLE ENTRY PLATE	600 × 200	1.34	U15466	U15465
UMCE 6.4	MODULAR CABLE ENTRY PLATE	600 × 400	3.15	U15431	U15430
UMCE 6.6	MODULAR CABLE ENTRY PLATE	600 × 600	4.81	U15441	U15440
UMCE 6.8	MODULAR CABLE ENTRY PLATE	600 × 800	5.67	U15451	U15450
UMCE 8.4	MODULAR CABLE ENTRY PLATE	800 × 400	3.33	U15427	U15424
UMCE 8.6	MODULAR CABLE ENTRY PLATE	800 × 600	5.67	U15459	U15458

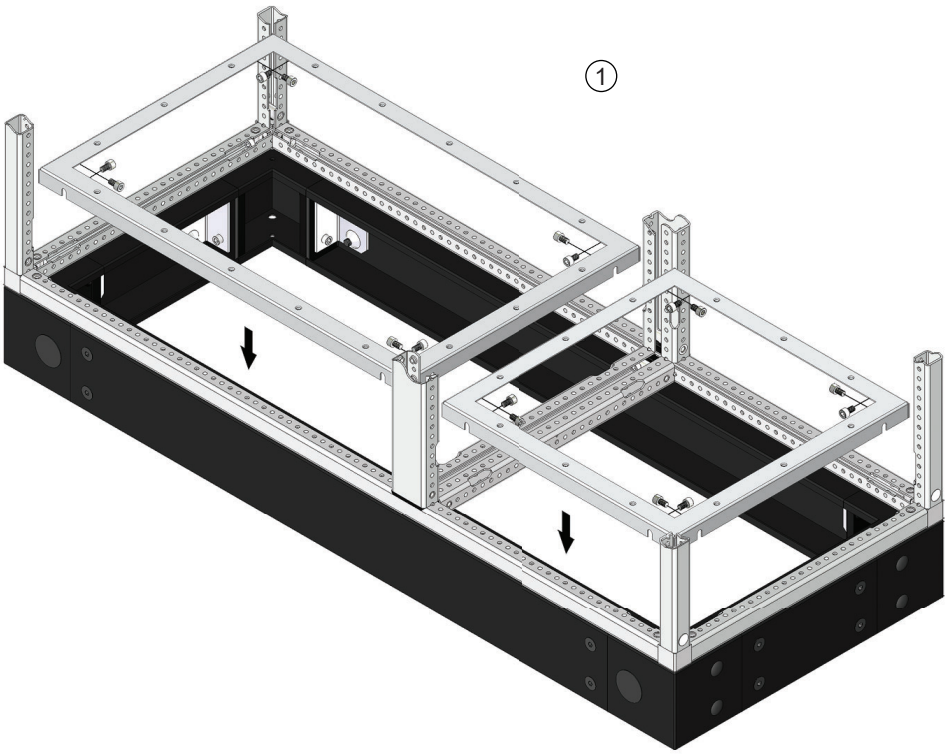

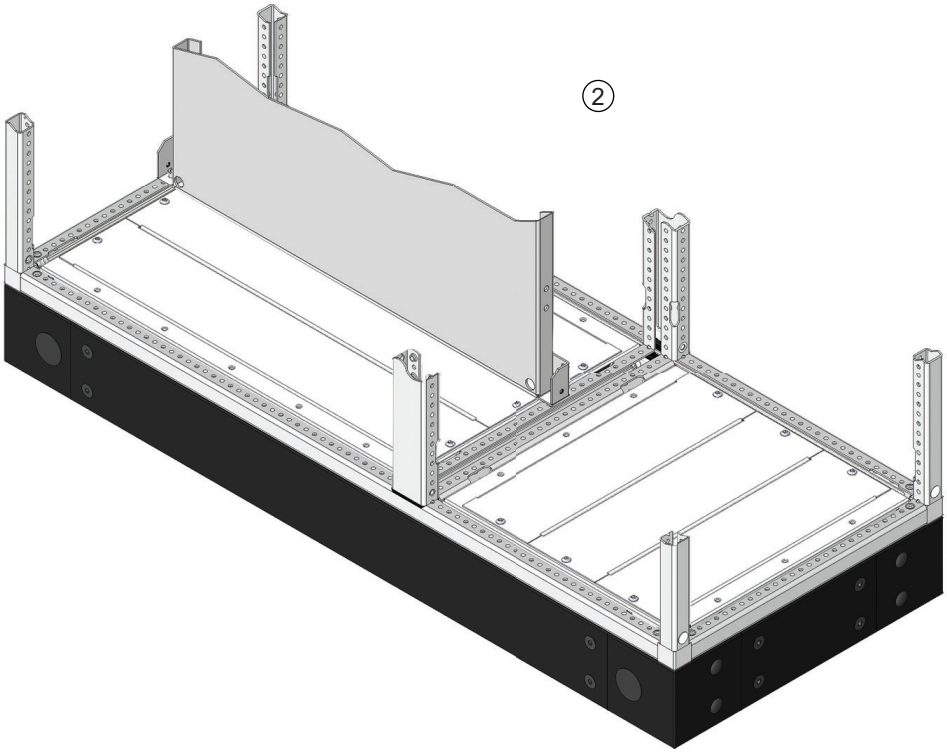

© 1997-2024 ELSTEEL. All Right Reserved

CABLE GLAND FRAME

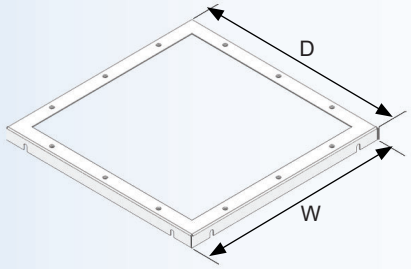

CAT. No.	DESCRIPTION	SIZE (W×D)	WEIGHT (kg)	ORDER No. Alu-zinc	ORDER No. RAL 9010 SMF.
UCGF 2.2	CABLE GLAND FRAME	200 × 200	0.21	U17401	U17400
UCGF 2.4	CABLE GLAND FRAME	200 × 400	0.36	U17406	U17405
UCGF 2.6	CABLE GLAND FRAME	200 × 600	0.54	U17411	U17410
UCGF 4.4	CABLE GLAND FRAME	400 × 400	0.53	U17421	U17420
UCGF 4.6	CABLE GLAND FRAME	400 × 600	0.70	U17426	U17425
UCGF 4.8	CABLE GLAND FRAME	400 × 800	0.89	U17431	U17430
UCGF 6.6	CABLE GLAND FRAME	600 × 600	0.88	U17436	U17435
UCGF 6.8	CABLE GLAND FRAME	600 × 800	1.06	U17441	U17440

CABLE GLAND FRAME FOR MOUNTING PLATE SLIDERS

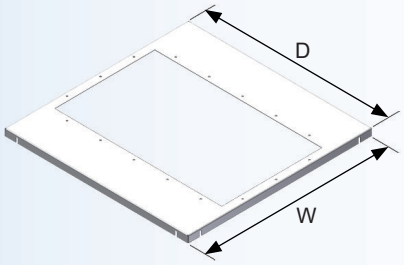

CAT. No.	DESCRIPTION	SIZE (W×D)	WEIGHT (kg)	ORDER No. Alu-zinc	ORDER No. Mild Steel Painted RAL 9010 SMF.
UCGFS 6.4	CABLE GLAND FRAME FOR MT. PLATE SLIDERS	600 × 400	1.36	U17446	U17445
UCGFS 6.6	CABLE GLAND FRAME FOR MT. PLATE SLIDERS	600 × 600	1.92	U17448	U17447
UCGFS 6.8	CABLE GLAND FRAME FOR MT. PLATE SLIDERS	600 × 800	2.50	U17450	U17449
UCGFS 8.6	CABLE GLAND FRAME FOR MT. PLATE SLIDERS	800 × 600	2.50	U17452	U17451
UCGFS 8.8	CABLE GLAND FRAME FOR MT. PLATE SLIDERS	800 × 800	2.71	U17454	U17453

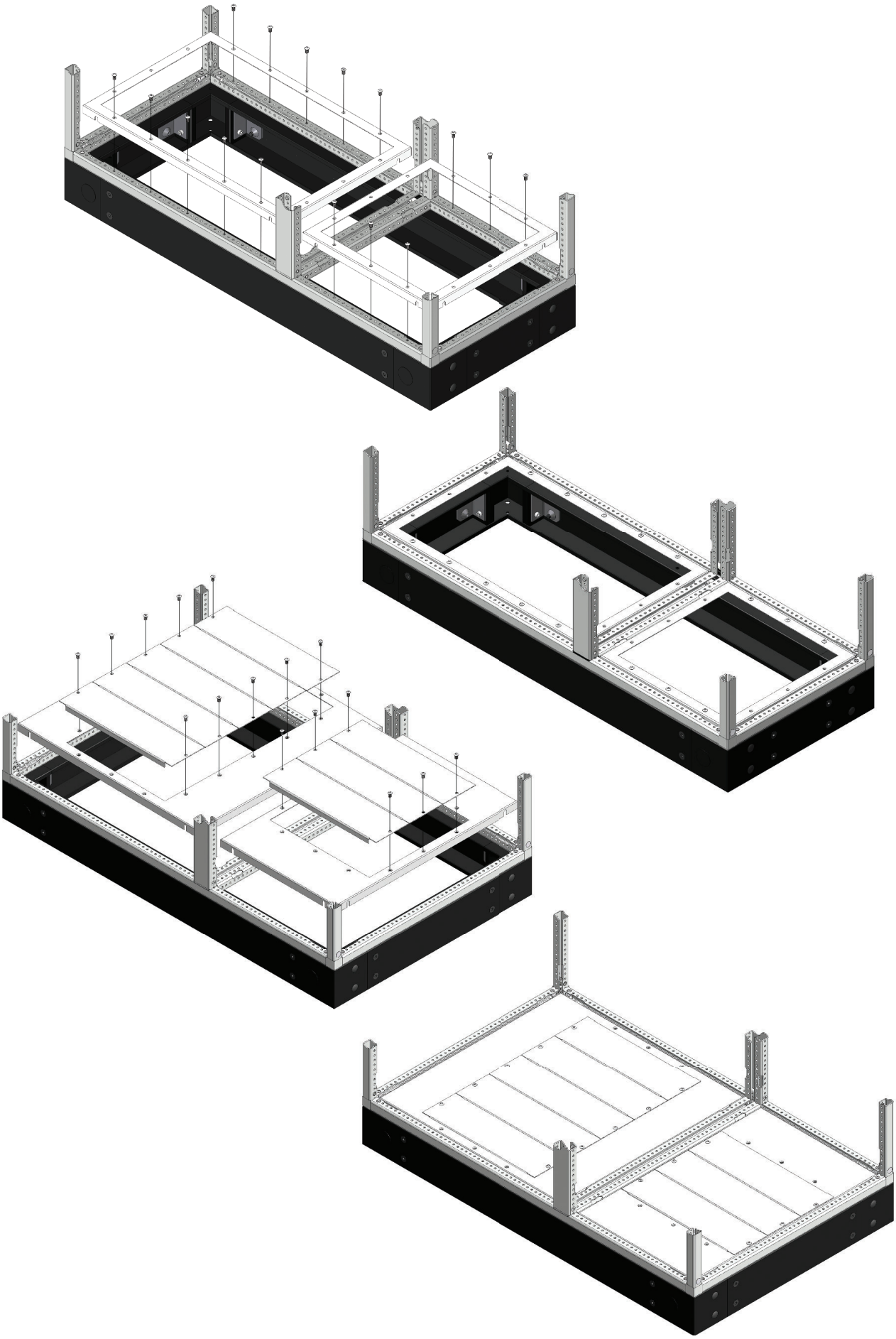

© 1997-2024 ELSTEEL. All Right Reserved

GLAND PLATE FOR CABLE GLAND FRAME

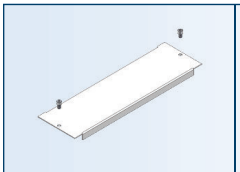
Cable Gland Plate

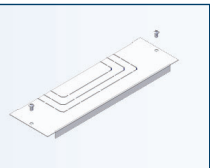
Knock Out Plate

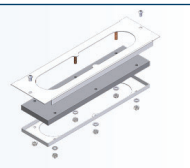
Quick Gland Plate

Aluminium Gland Plate

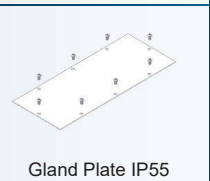
Gland Plate IP55

Gland Plate With Slider

CAT. No.	DESCRIPTION	SIZE (W×D)	WEIGHT (kg)	ORDER No. Alu-Zinc	ORDER No.
UBLP 2	CABLE GLAND PLATE	200 × 100	0.16	U17461	U17460
UBLP 4	CABLE GLAND PLATE	400 × 100	0.32	U17466	U17465
UBLP 6	CABLE GLAND PLATE	600 × 100	0.48	U17471	U17470
UBLP 8	CABLE GLAND PLATE	800 × 100	0.64	U17476	U17475
UKOP 2	KNOCK OUT PLATE	200 × 100	0.16	-	U15470
UKOP 4	KNOCK OUT PLATE	400 × 100	0.51	-	U15480
UKOP 6	KNOCK OUT PLATE	600 × 100	0.74	-	U15490
UKOP 8	KNOCK OUT PLATE	800 × 100	0.64	-	U15495
UQGP 2	QUICK GLAND PLATE	200 × 100	0.17	-	U15520
UQGP 4	QUICK GLAND PLATE	400 × 100	0.97	-	U15530
UQGP 6	QUICK GLAND PLATE	600 × 100	1.60	-	U15540
UQGP 8	QUICK GLAND PLATE	800 × 100	2.23	-	U15545
UAGP 2	ALUMINIUM GLAND PLATE 3mm	200 × 100	0.11	-	U15570
UAGP 4	ALUMINIUM GLAND PLATE 3mm	400 × 100	0.22	-	U15580
UAGP 6	ALUMINIUM GLAND PLATE 3mm	600 × 100	0.34	-	U15590
UAGP 8	ALUMINIUM GLAND PLATE 3mm	800 × 100	0.45	-	U15595
UGP55 2.2	GLAND PLATE	200 × 200	0.24	-	U16360
UGP55 2.4	GLAND PLATE	200 × 400	0.60	-	U16365
UGP55 4.4	GLAND PLATE	400 × 400	1.41	-	U16375
UGP55 4.6	GLAND PLATE	400 × 600	2.23	-	U16380
UGP55 4.8	GLAND PLATE	400 × 800	3.07	-	U16393
UGP55 6.2	GLAND PLATE	600 × 200	0.93	-	U16382
UGP55 6.6	GLAND PLATE	600 × 600	3.57	-	U16390
UGP55 6.8	GLAND PLATE	600 × 800	4.85	-	U16396
UGPSL 1.4	GLAND PLATE WITH SLIDER	100 × 400	0.70	-	U16385
UGPSL 1.6	GLAND PLATE WITH SLIDER	100 × 600	1.11	-	U16386
UGPSL 1.8	GLAND PLATE WITH SLIDER	100 × 800	1.48	-	U16387

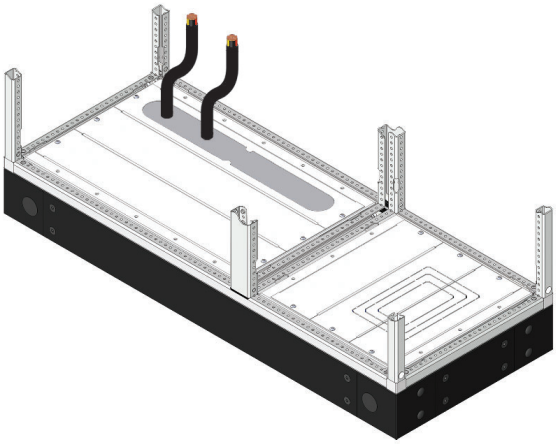

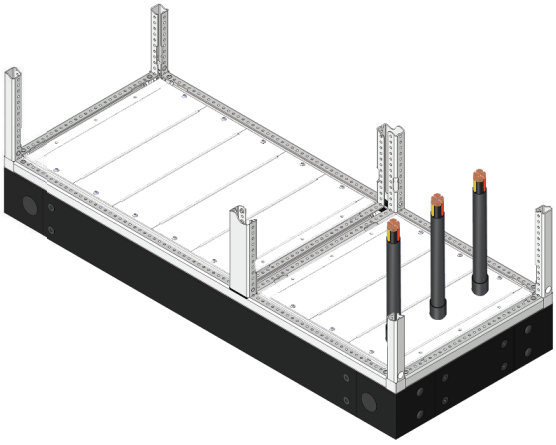

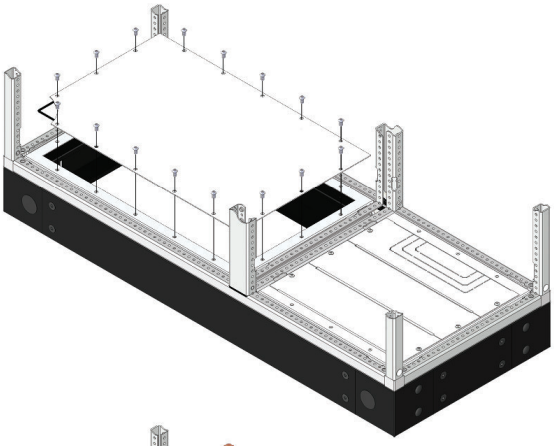

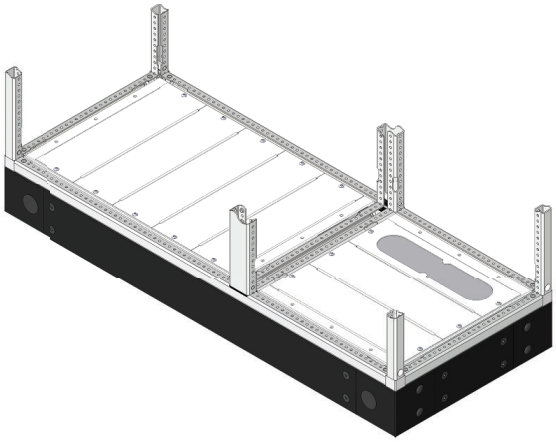

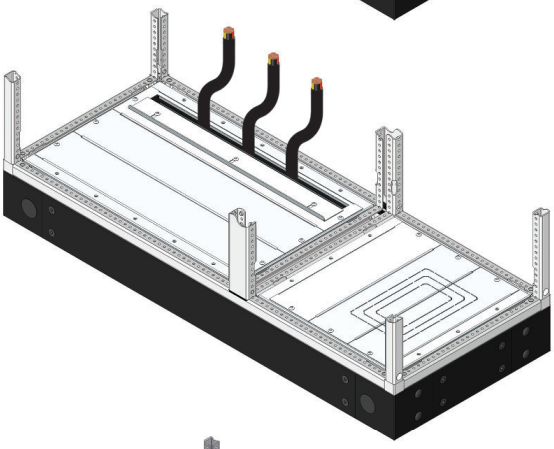

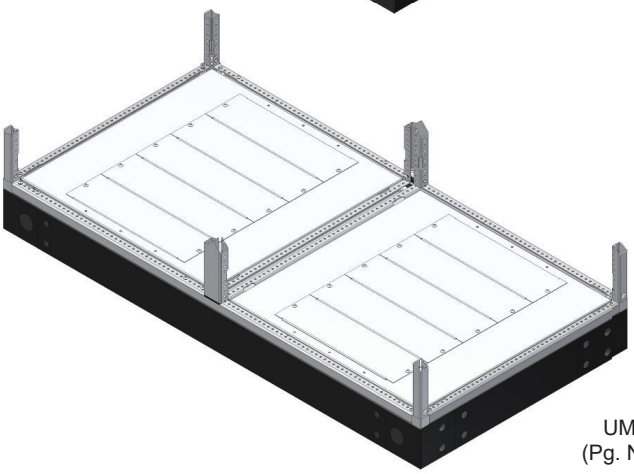

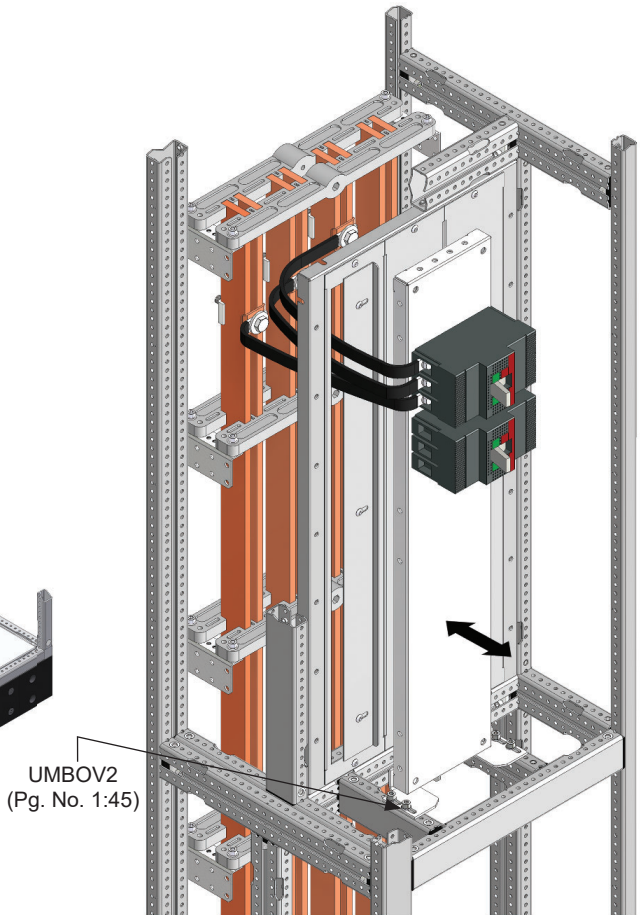

© 1997-2024 ELSTEEL. All Right Reserved

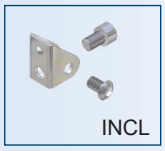

INTERNAL GLAND PLATE

CAT. No.	DESCRIPTION	SIZE (W×H)	WEIGHT (kg)	ORDER No. Aluminium 3mm RAL 7035 FTF.	ORDER No. Mild Steel RAL 7035 FTF.
UIGP 2.2	INTERNAL GLAND PLATE	200 × 200	0.64	U13465	U13460
UIGP 2.4	INTERNAL GLAND PLATE	200 × 400	1.28	U13475	U13470
UIGP 2.6	INTERNAL GLAND PLATE	200 × 600	2.06	U13485	U13480
UIGP 2.8	INTERNAL GLAND PLATE	200 × 800	2.71	U13495	U13490
UIGP 4.4	INTERNAL GLAND PLATE	400 × 400	2.99	U13515	U13510
UIGP 4.6	INTERNAL GLAND PLATE	400 × 600	4.60	U13525	U13520
UIGP 4.8	INTERNAL GLAND PLATE	400 × 800	6.21	U13535	U13530
UIGP 6.6	INTERNAL GLAND PLATE	600 × 600	7.30	U13555	U13550
UIGP 6.8	INTERNAL GLAND PLATE	600 × 800	10.42	U13560	U13560

EXTERNAL GLAND PLATE

CAT. No.	DESCRIPTION	SIZE (W×H)	WEIGHT (kg)	ORDER No. Aluminium RAL 7035 FTF.	ORDER No. Mild Steel RAL 9010 SMF.
UEGP 2.2	EXTERNAL GLAND PLATE	200 × 200	0.92	U13584	U13580
UEGP 2.4	EXTERNAL GLAND PLATE	200 × 400	1.89	U13594	U13590
UEGP 2.6	EXTERNAL GLAND PLATE	200 × 600	2.86	U13604	U13600
UEGP 2.8	EXTERNAL GLAND PLATE	200 × 800	3.83	U13614	U13610
UEGP 2.10	EXTERNAL GLAND PLATE	200 × 1000	4.79	U13624	U13620
UEGP 4.4	EXTERNAL GLAND PLATE	400 × 400	3.88	U13644	U13640
UEGP 4.6	EXTERNAL GLAND PLATE	400 × 600	5.86	U13654	U13650
UEGP 4.8	EXTERNAL GLAND PLATE	400 × 800	7.85	U13662	U13660
UEGP 6.6	EXTERNAL GLAND PLATE	600 × 600	8.87	U13684	U13680
UEGP 6.8	EXTERNAL GLAND PLATE	600 × 800	11.88	U13692	U13690
UEGP 8.8	EXTERNAL GLAND PLATE	800 × 800	15.91	U13714	U13710

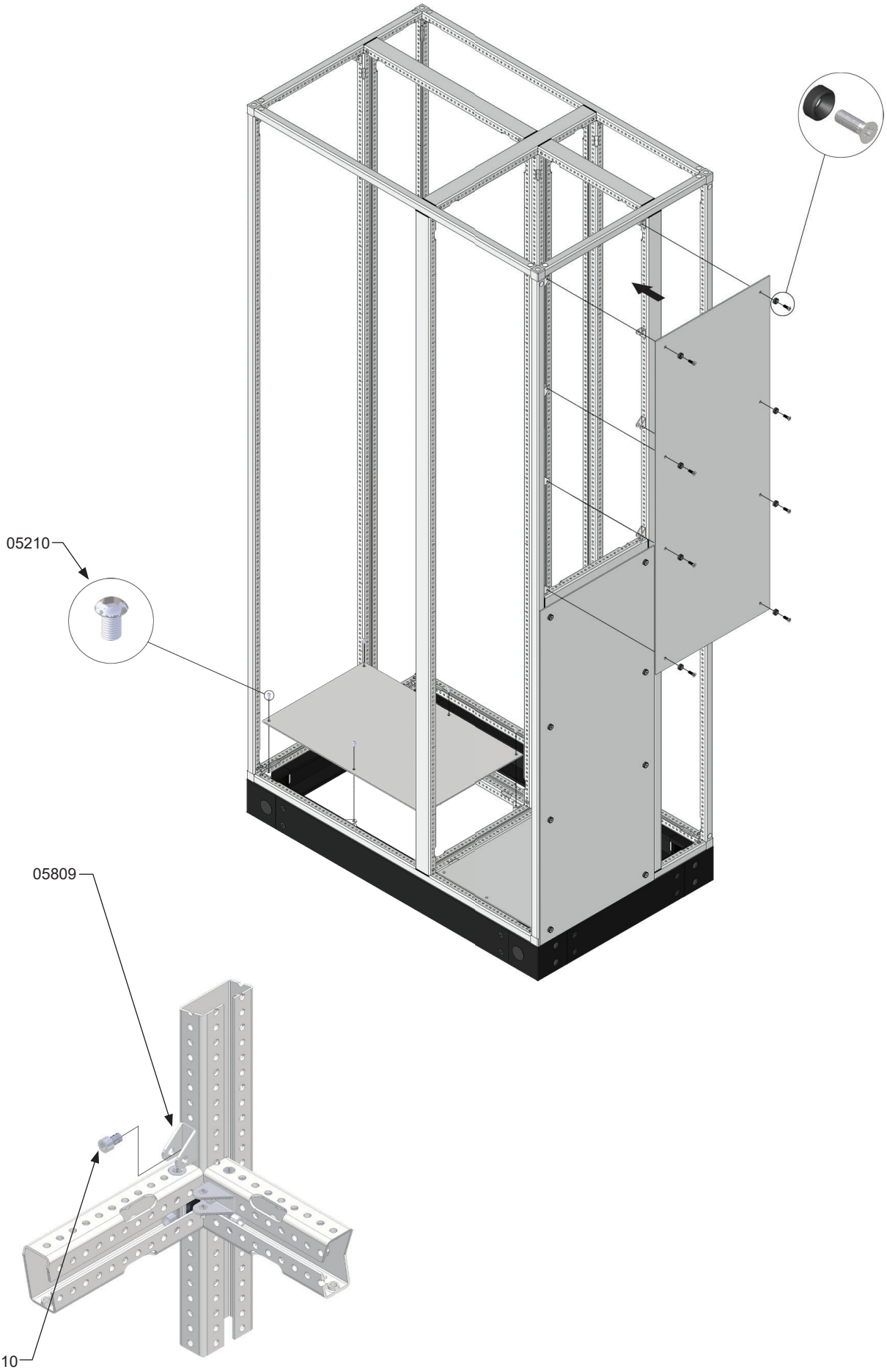

© 1997-2024 ELSTEEL. All Right Reserved

CABLE HOLDER

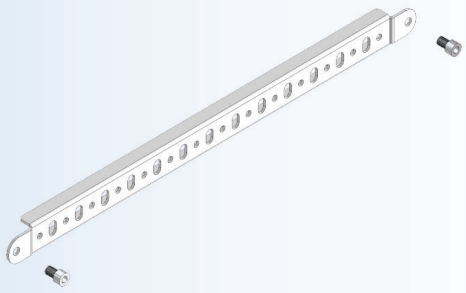

CAT. No.	DESCRIPTION	WEIGHT (kg)	ORDER No. Alu-zinc	ORDER No. RAL 9010 SMF.
UCH 2	CABLE HOLDER 200	0.100	U14312	U14310
UCH 3	CABLE HOLDER 300	0.175	U14325	U14320
UCH 4	CABLE HOLDER 400	0.170	U14335	U14330
UCH 5	CABLE HOLDER 500	0.290	U14338	U14333
UCH 6	CABLE HOLDER 600	0.350	U14345	U14340
UCH 7	CABLE HOLDER 700	0.400	U14348	U14347
UCH 8	CABLE HOLDER 800	0.470	U14355	U14350

DOOR CABLE HOLDER

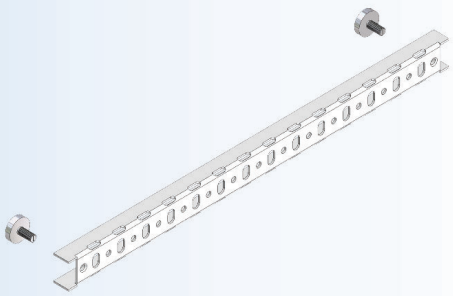

CAT. No.	DESCRIPTION	WEIGHT (kg)	ORDER No. RAL 9010 SMF.
UDCH 2	DOOR CABLE HOLDER 200	0.09	U15320
UDCH 3	DOOR CABLE HOLDER 300	0.14	U15330
UDCH 4	DOOR CABLE HOLDER 400	0.19	U15340
UDCH 6	DOOR CABLE HOLDER 600	0.30	U15350
UDCH 8	DOOR CABLE HOLDER 800	0.39	U15360
UDCH 10	DOOR CABLE HOLDER 1000	0.49	U15370

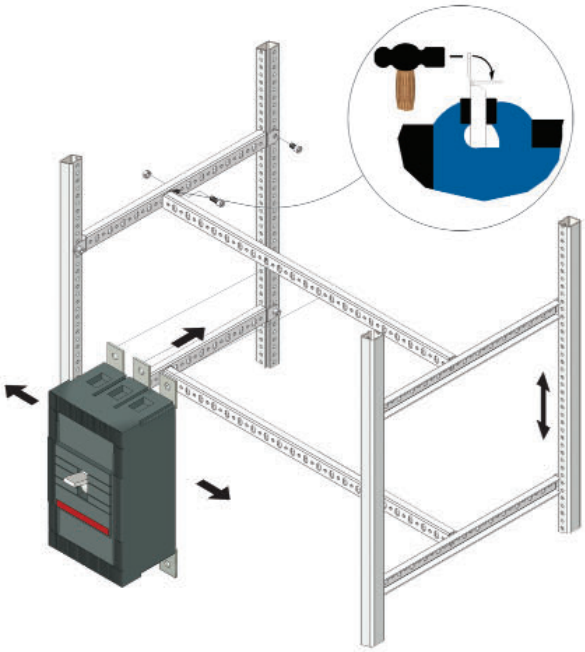

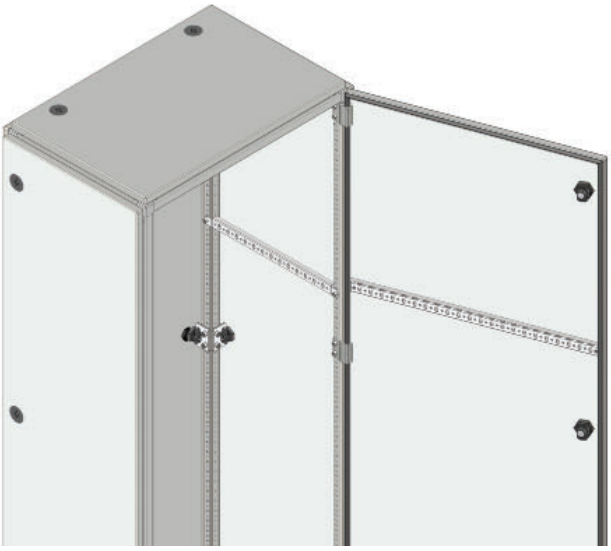

© 1997-2024 ELSTEEL. All Right Reserved

Chimney Type A or standard gland plate 216 x 86 shall be fitted

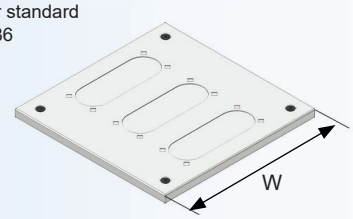

COVER (FOR CHIMNEY TYPE A)

CAT. No.	DESCRIPTION	SIZE (W×D)	No. OF GLANDS	WEIGHT (kg)	VERSION 3 ORDER No. RAL 7035 FTF.
UCCH 4.2	COVER FOR (CHIMNEY TYPE A)	400 × 200	1	1.31	U14777
UCCH 4.4	COVER FOR (CHIMNEY TYPE A)	400 × 400	3	2.50	U14787
UCCH 6.2	COVER FOR (CHIMNEY TYPE A)	600 × 200	2	2.92	U14797
UCCH 6.4	COVER FOR (CHIMNEY TYPE A)	600 × 400	6	3.51	U14807

Type A

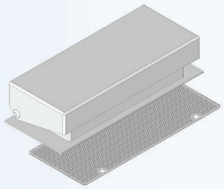

x 04 Nos.

CHIMNEY TYPE A

CAT. No.	DESCRIPTION	OPENING SIZE	WEIGHT (kg)	ORDER No. RAL 7035 FTF.
UCHM	CHIMNEY TYPE A	196×68	0.73	U14814

Type B

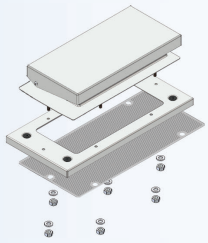

CHIMNEY TYPE B

CAT. No.	DESCRIPTION	SIZE (W×D)	GLAND HOLE SIZE	WEIGHT (kg)	VERSION 3 ORDER No. RAL 7035 FTF.
UCHAB 4.2	CHIMNEY TYPE B	400 × 200	275 ×130	2.38	U15027
UCHAB 6.2	CHIMNEY TYPE B	600 × 200	475 ×130	3.00	U15037

STEEL GLAND PLATE

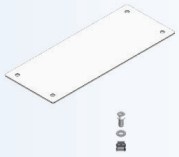

x 04 Nos.

CAT. No.	DESCRIPTION	SIZE (W×H)	WEIGHT (kg)	ORDER No. RAL 7035 FTF.
USG 216	STEEL GLAND PLATE	216 × 86	0.22	U14724

© 1997-2024 ELSTEEL. All Right Reserved

ARC FILTER SEPARATION PLATE

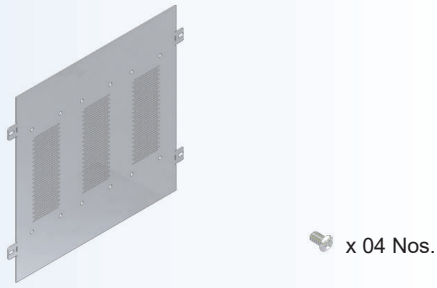

CAT. No.	DESCRIPTION	SIZE	WEIGHT (kg)	ORDER No. Alu Zinc	ORDER No. Mild Steel RAL 9010 SMF.
UAFSP 4.4	ARC FILTER SEPARATION PLATE	400×400	1.36	U16558	U16550
UAFSP 4.6	ARC FILTER SEPARATION PLATE	400×600	2.06	U16559	U16551
UAFSP 4.8	ARC FILTER SEPARATION PLATE	400×800	2.79	U16560	U16552

ARC FAULT BARRIER PLATE

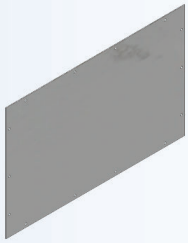

CAT. No.	DESCRIPTION	SIZE (W×D)	WEIGHT (kg)	ORDER No. Alu Zinc
UAFBPL 2.2	ARC FAULT BARRIER PLATE	200 x 200	0.46	U33035
UAFBPL 2.4	ARC FAULT BARRIER PLATE	200 x 400	0.95	U33036
UAFBPL 2.6	ARC FAULT BARRIER PLATE	200 x 600	1.44	U33037
UAFBPL 2.8	ARC FAULT BARRIER PLATE	200 x 800	1.48	U33038
UAFBPL 4.4	ARC FAULT BARRIER PLATE	400 x 400	2.05	U33039
UAFBPL 4.6	ARC FAULT BARRIER PLATE	400 x 600	3.09	U33040
UAFBPL 4.8	ARC FAULT BARRIER PLATE	400 x 800	4.23	U33041
UAFBPL 6.6	ARC FAULT BARRIER PLATE	600 x 600	4.70	U33042
UAFBPL 6.8	ARC FAULT BARRIER PLATE	600 x 800	6.40	U33043

ARC FILTER

CAT. No.	DESCRIPTION	SIZE	WEIGHT (kg)	ORDER No. RAL 9010 SMF.
UAF216	ARC FILTER	216×86	0.21	U14890

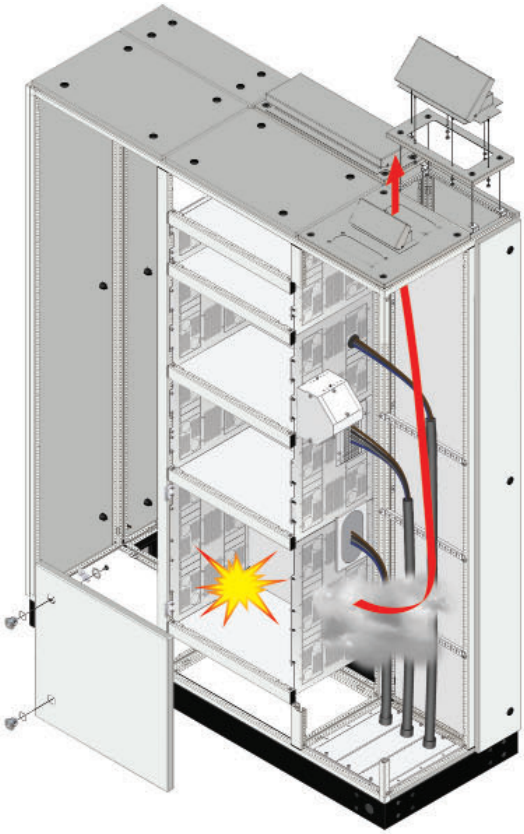

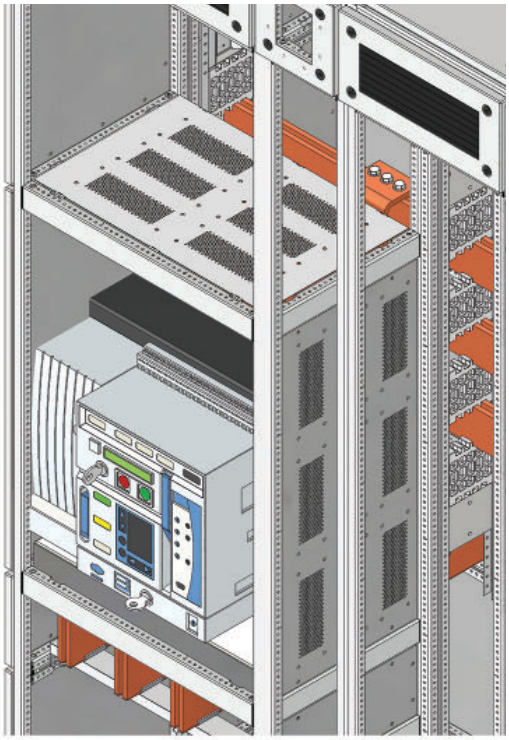

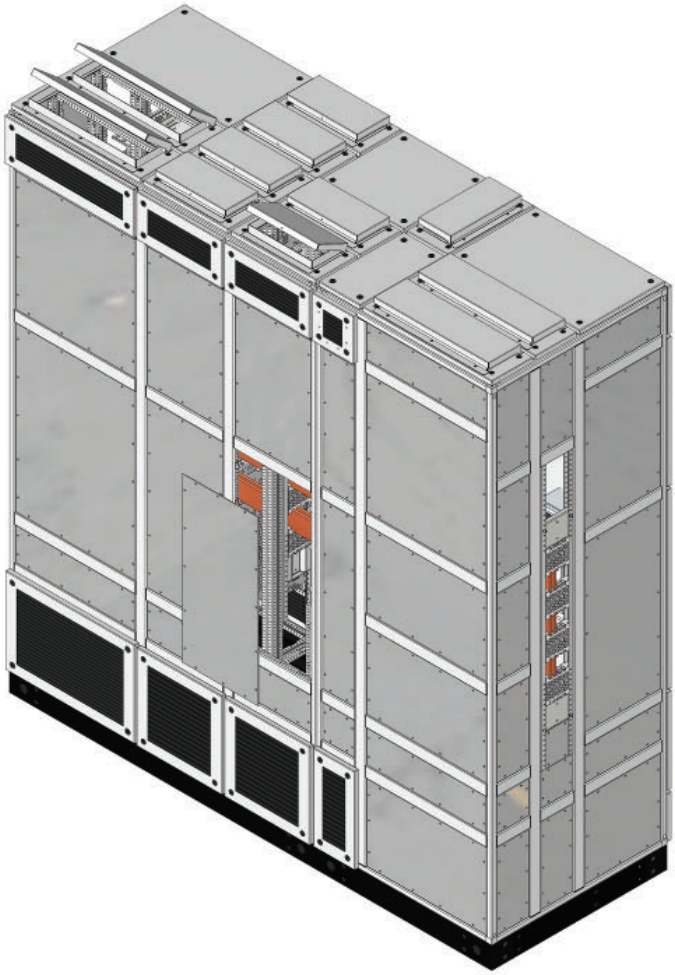

* Arc Fault barrier plates must be fitted as well as external cover plates.

© 1997-2024 ELSTEEL. All Right Reserved

LIFTING EYES

CAT. No.	DESCRIPTION	MAX. LOAD (kg)	WEIGHT (kg)	ORDER No. Zinc plated
ULE 2	LIFTING EYES	1400	2.18	U14390

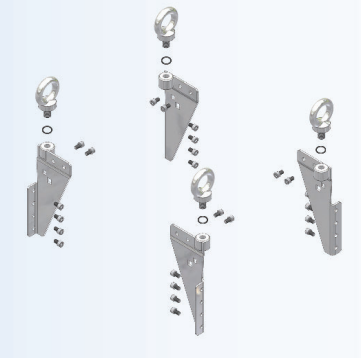

LIFTING EYES (FOR FLAT COVER)

CAT. No.	DESCRIPTION	MAX. LOAD (kg)	WEIGHT (kg)	ORDER No. Zinc plated
ULE 3	LIFTING EYES	1400	2.00	U14400

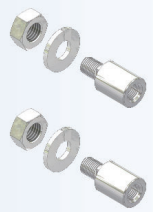

FIXING STUDS (FOR MOUNTING PLATE V2)

CAT. No.	DESCRIPTION	WEIGHT (kg)	ORDER No. Zinc plated
UFSMP 2	FIXING STUDS	0.084	U14395
UFSMP 3	FIXING STUDS	0.092	U14396

To be used when fitting a V2 mounting plate in a top section containing lifting eye brackets.

Standard Cover

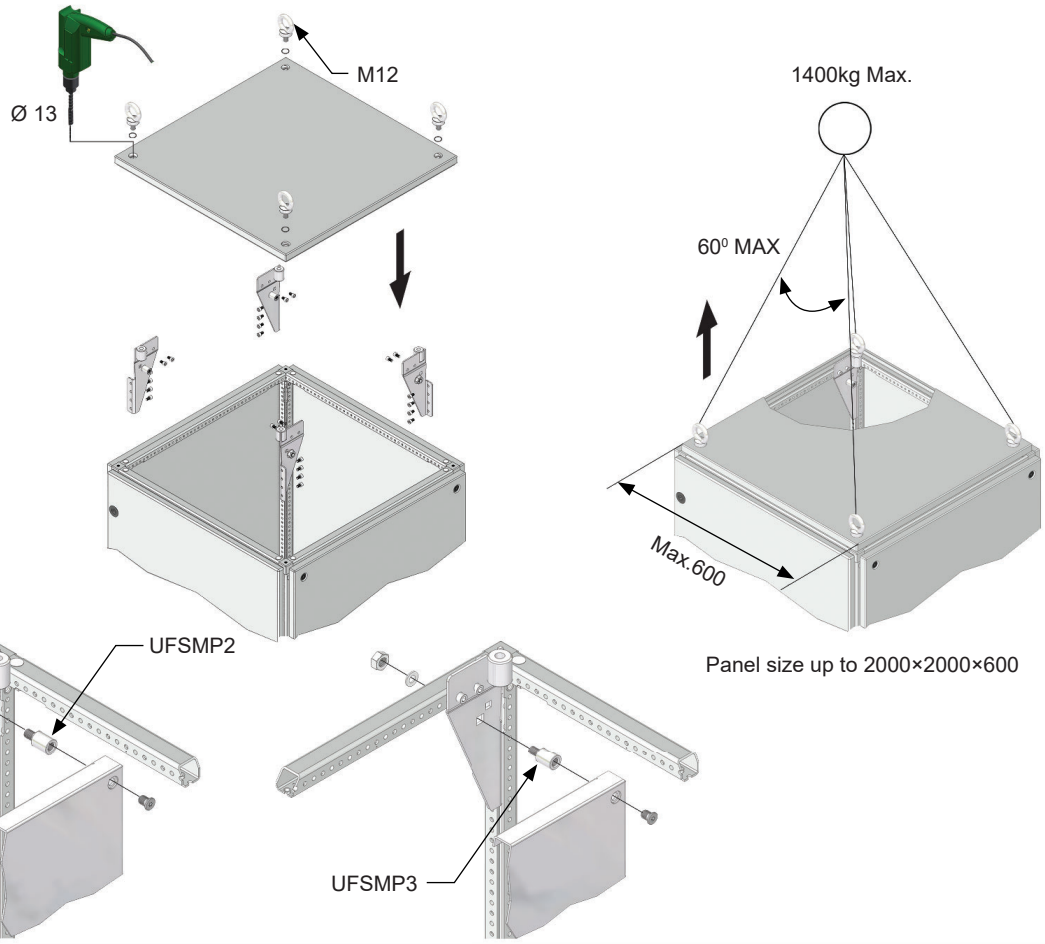

Panel size up to 2000×2000×600

Flat Cover

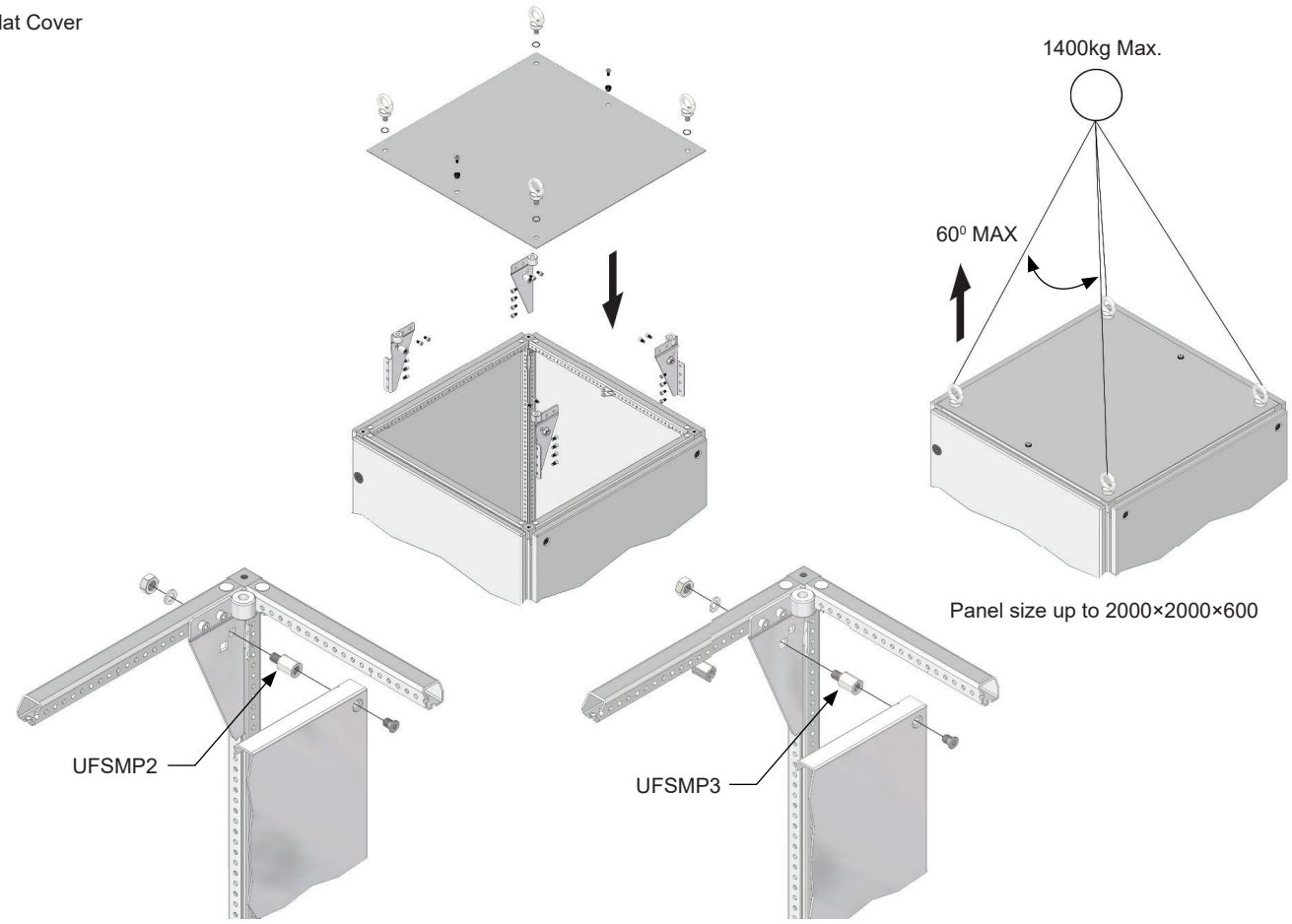

Panel size up to 2000×2000×600

© 1997-2024 ELSTEEL. All Right Reserved

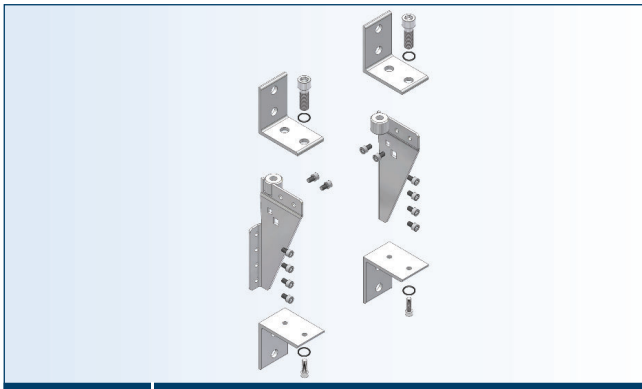

TM WALL MOUNTING BRACKETS

CAT. No.	DESCRIPTION	WEIGHT (kg)	ORDER No. Zinc plated
UTMWMB	TM WALL MOUNTING BRACKETS	2.14	U14420

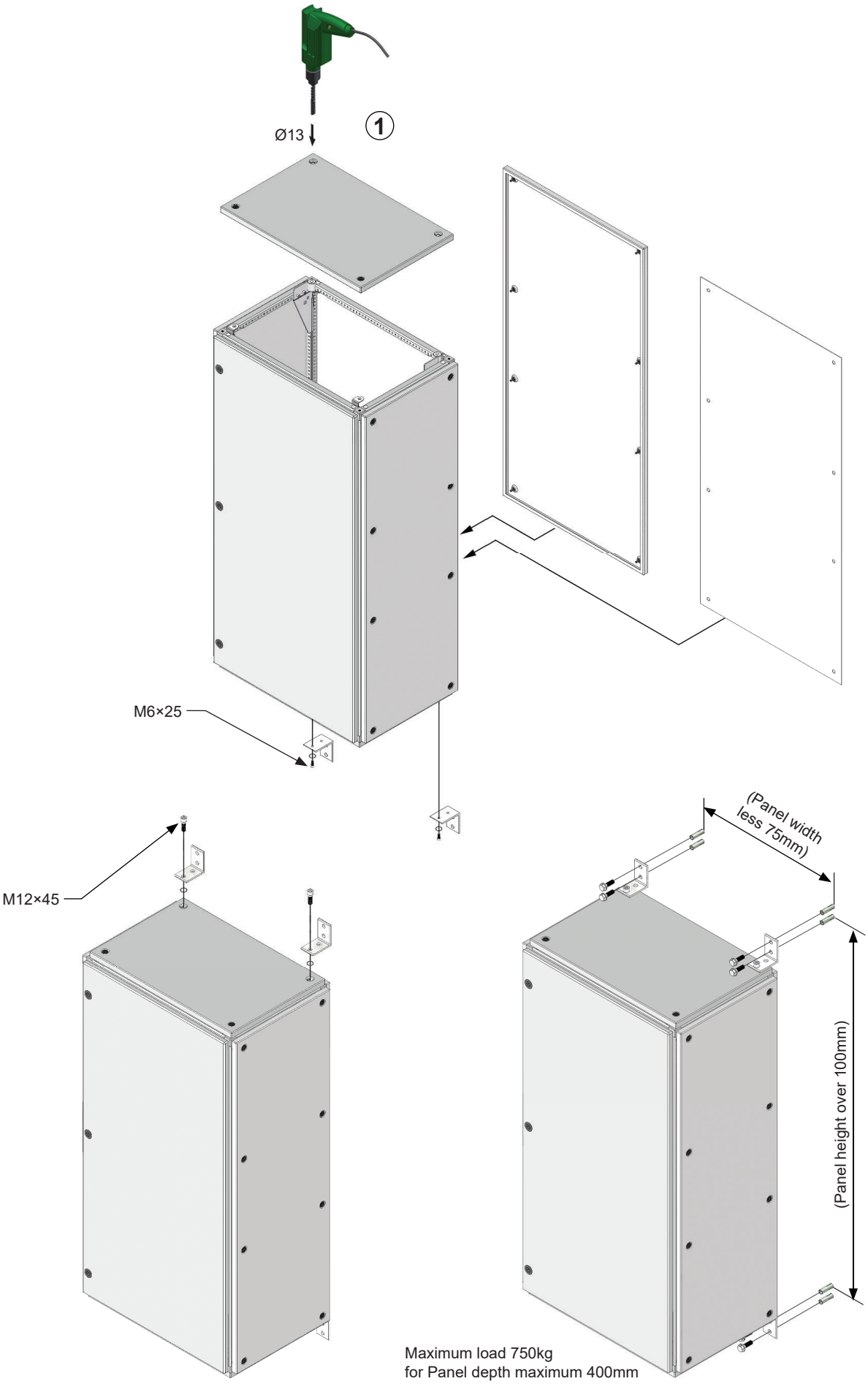

© 1997-2024 ELSTEEL. All Right Reserved

PANEL ASSEMBLY KIT

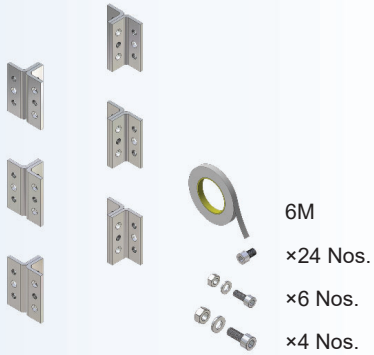

CAT. No.	DESCRIPTION	WEIGHT (kg)	ORDER No. Zinc plated
UBRS 50	PANEL ASSEMBLY KIT	0.73	U14280

PANEL ASSEMBLY KIT

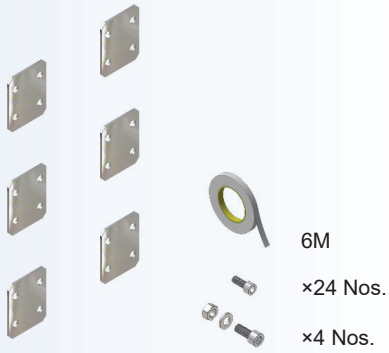

CAT. No.	DESCRIPTION	WEIGHT (kg)	ORDER No. Zinc plated
UPAK	PANEL ASSEMBLY KIT	0.36	U14293

1

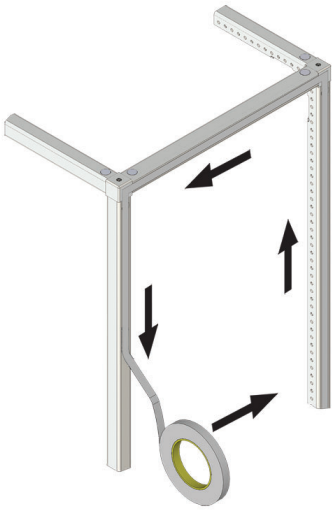

2

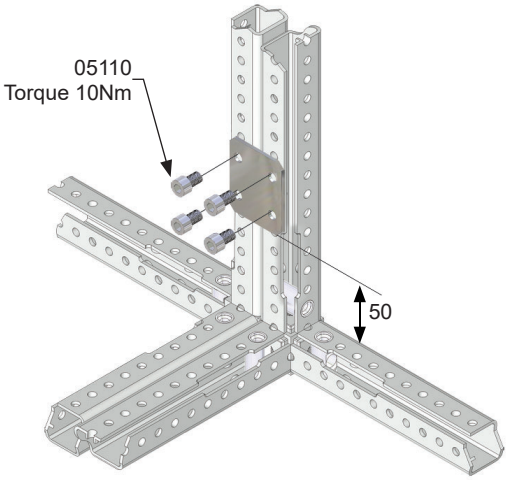

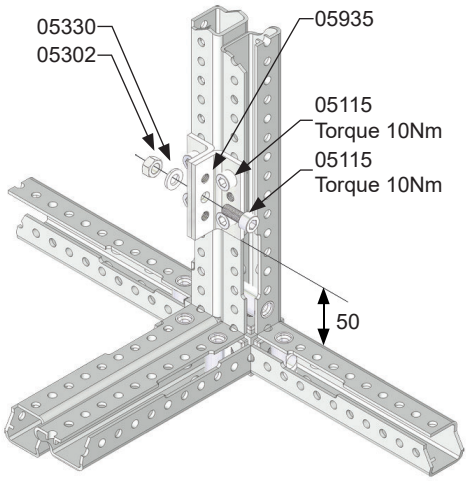

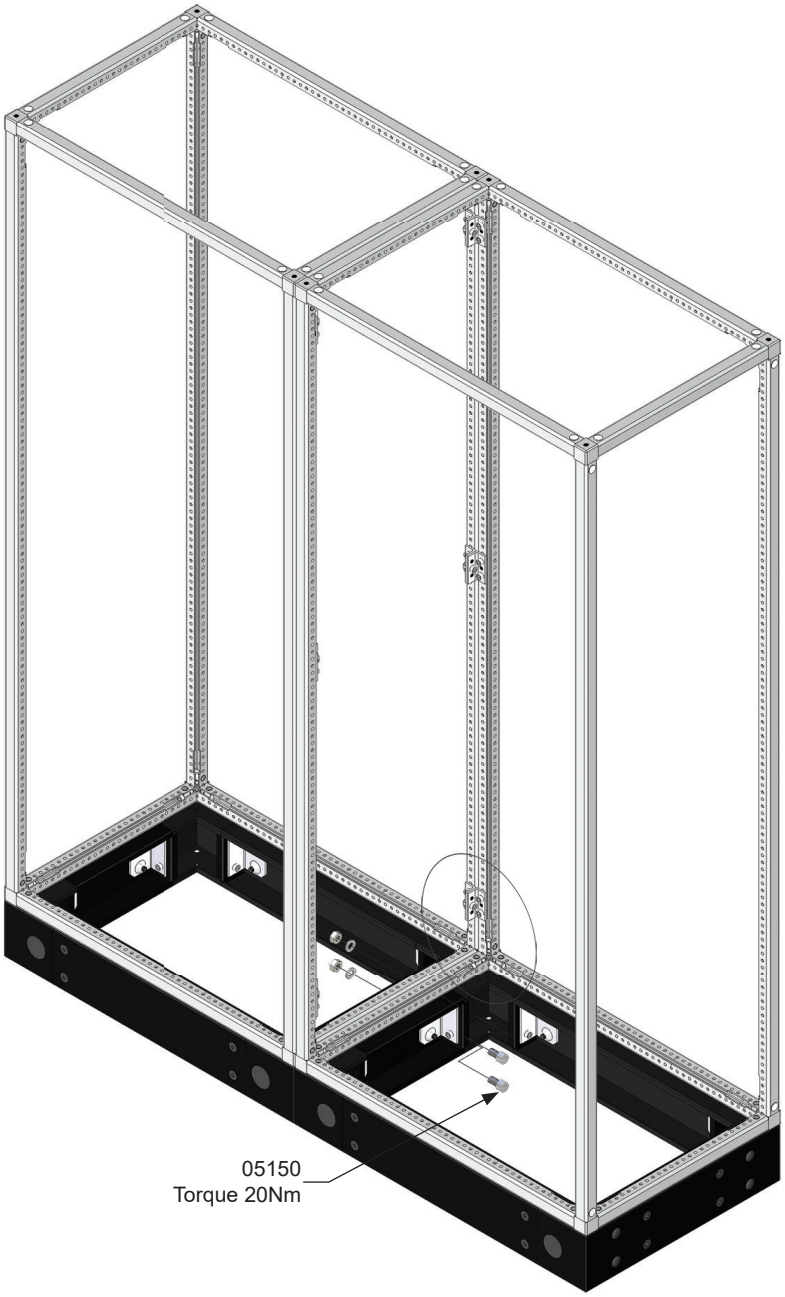

* BRS 50 Panel assembly kit cannot be used with rear MAB main busbar system.

© 1997-2024 ELSTEEL. All Right Reserved

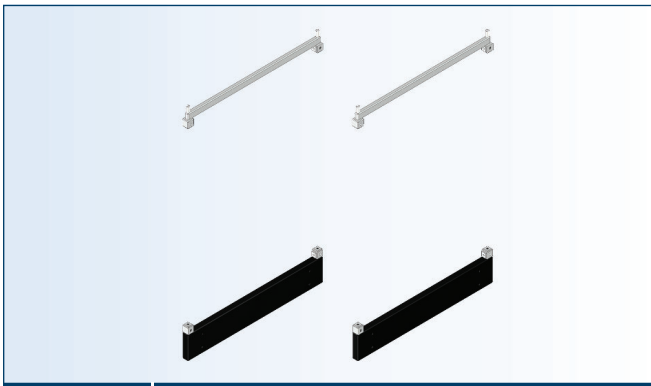

“L” SHAPE CORNER KIT

CAT. No.	DESCRIPTION	PANEL DEPTH	WEIGHT (kg)	ORDER No. RAL 7035 FTF.
ULSK 2	“L” SHAPE CORNER KIT 200	200	3.38	U14674
ULSK 4	“L” SHAPE CORNER KIT 400	400	7.36	U14684
ULSK 6	“L” SHAPE CORNER KIT 600	600	5.87	U14694
ULSK 8	“L” SHAPE CORNER KIT 800	800	7.50	U14704

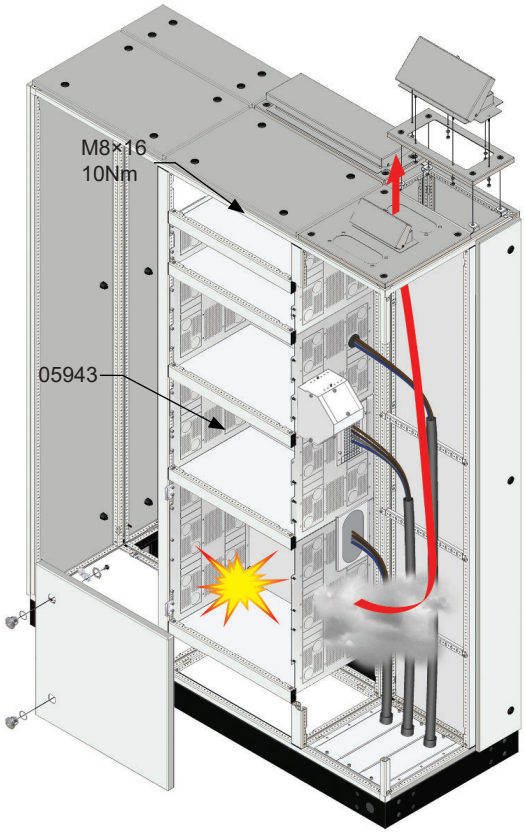

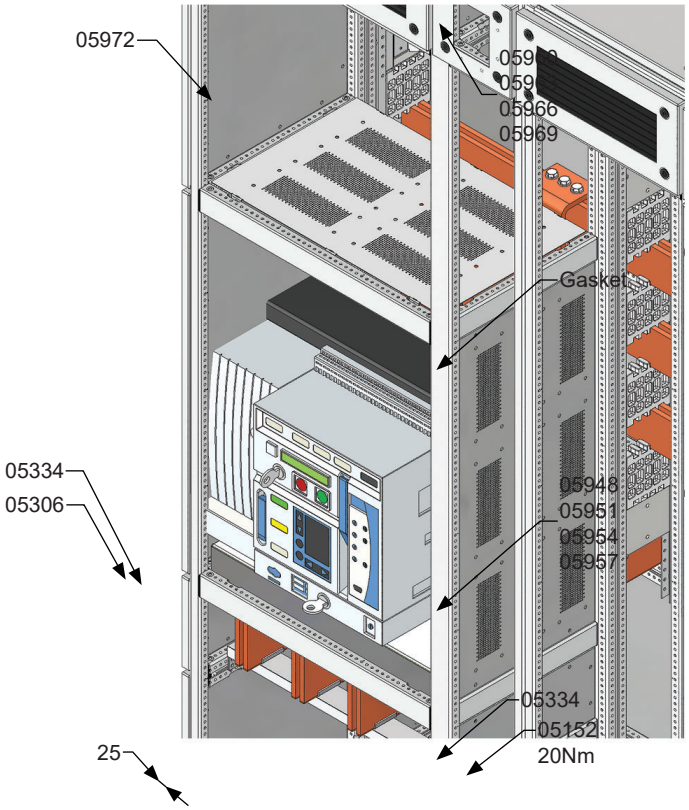

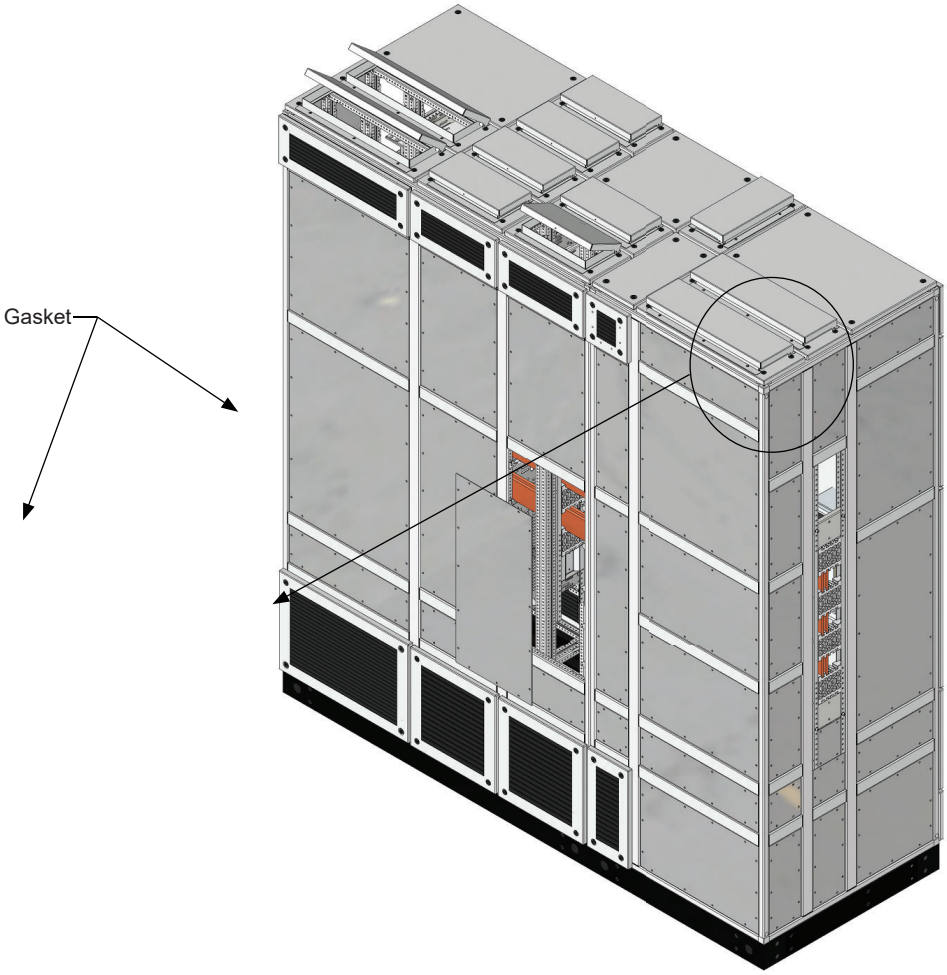

© 1997-2024 ELSTEEL. All Right Reserved

DESIGN PROTECTED

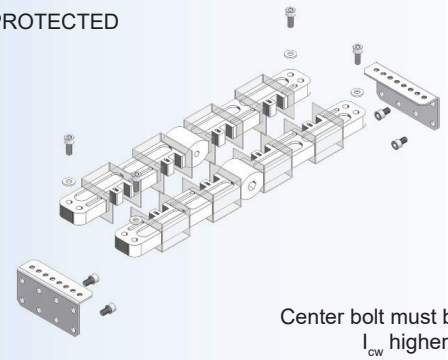

UNIVERSAL BUSBAR HOLDER

Center bolt must be used for I_{cw} higher than 50kA

CAT. No.	DESCRIPTION	RAIL LENGTH	MAX. Cu SIZE	CONDUCTORS PER PHASE	PHASE CENTERS	WEIGHT (kg)	ORDER No.
UUBH 1	UNIVERSAL BUSBAR HOLDER	90	10×40	2	75	0.59	U20550

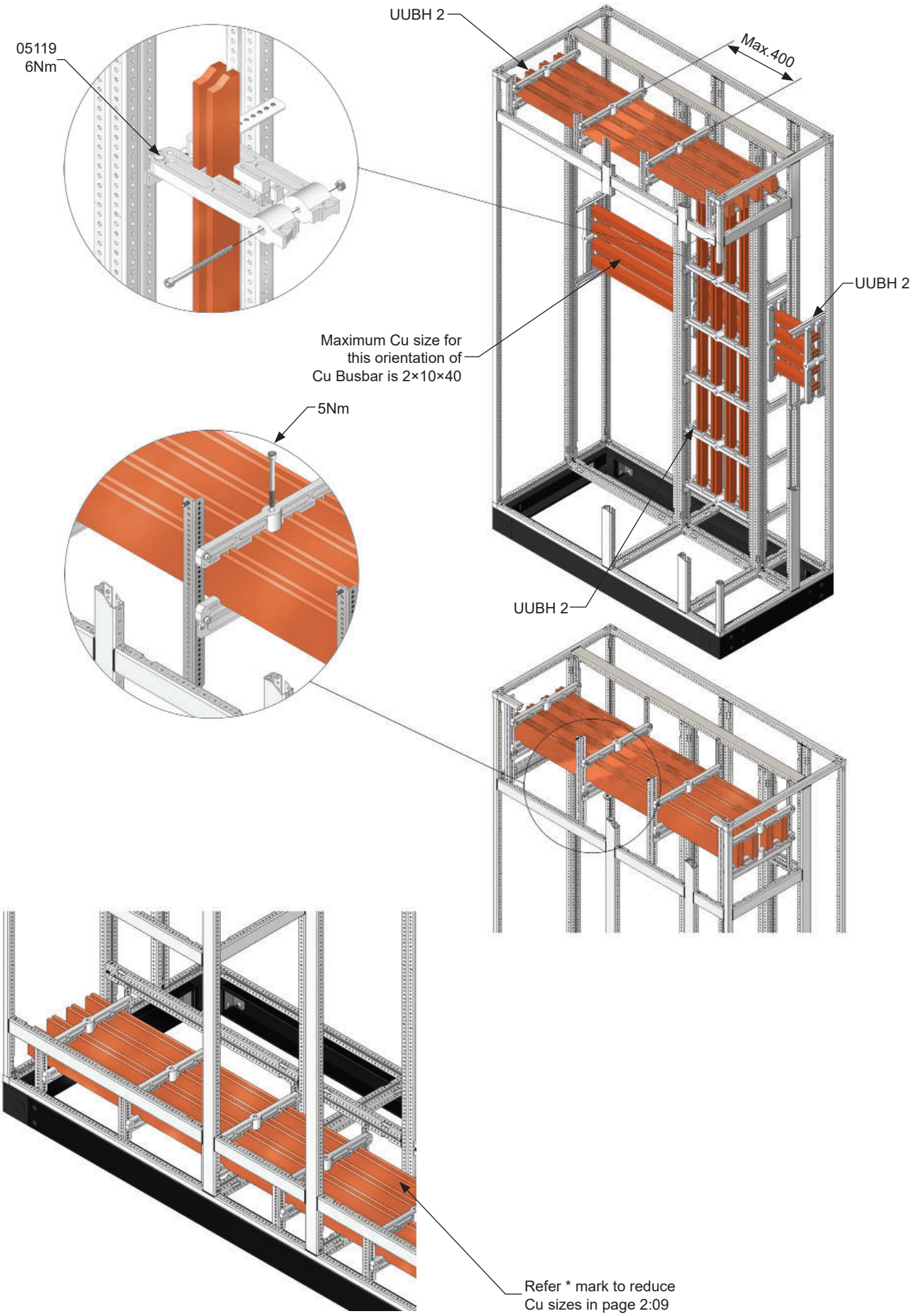

© 1997-2024 ELSTEEL. All Right Reserved

DESIGN PROTECTED

UNIVERSAL BUSBAR HOLDER

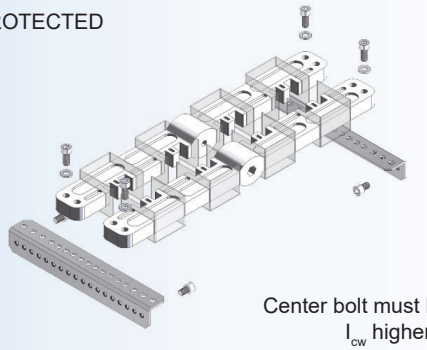

Center bolt must be used for I_{cw} higher than 50kA

CAT. No.	DESCRIPTION	RAIL LENGTH	MAX. Cu SIZE	CONDUCTORS PER PHASE	PHASE CENTERS	WEIGHT (kg)	ORDER No.
UUBH 2	UNIVERSAL BUSBAR HOLDER	190	10×100	2	75	0.65	U20560
UUBH 3	UNIVERSAL BUSBAR HOLDER	390	10×100	2	75	0.90	U20563

CENTER BOLT

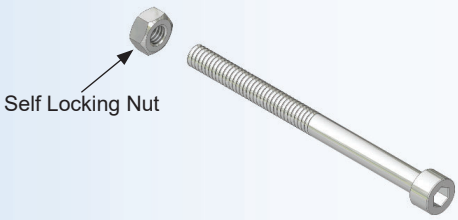

Q = 8.8

CAT. No.	DESCRIPTION	Cu SIZE	WEIGHT (kg)	ORDER No.
UCLSC 5	CENTER BOLT M6×80	10×50	0.21	U20240
UCLSC 6	CENTER BOLT M6×90	10×60	0.24	U20242
UCLSC 8	CENTER BOLT M6×110	10×80	0.28	U20244
UCLSC 10	CENTER BOLT M6×130	10×100	0.31	U20246

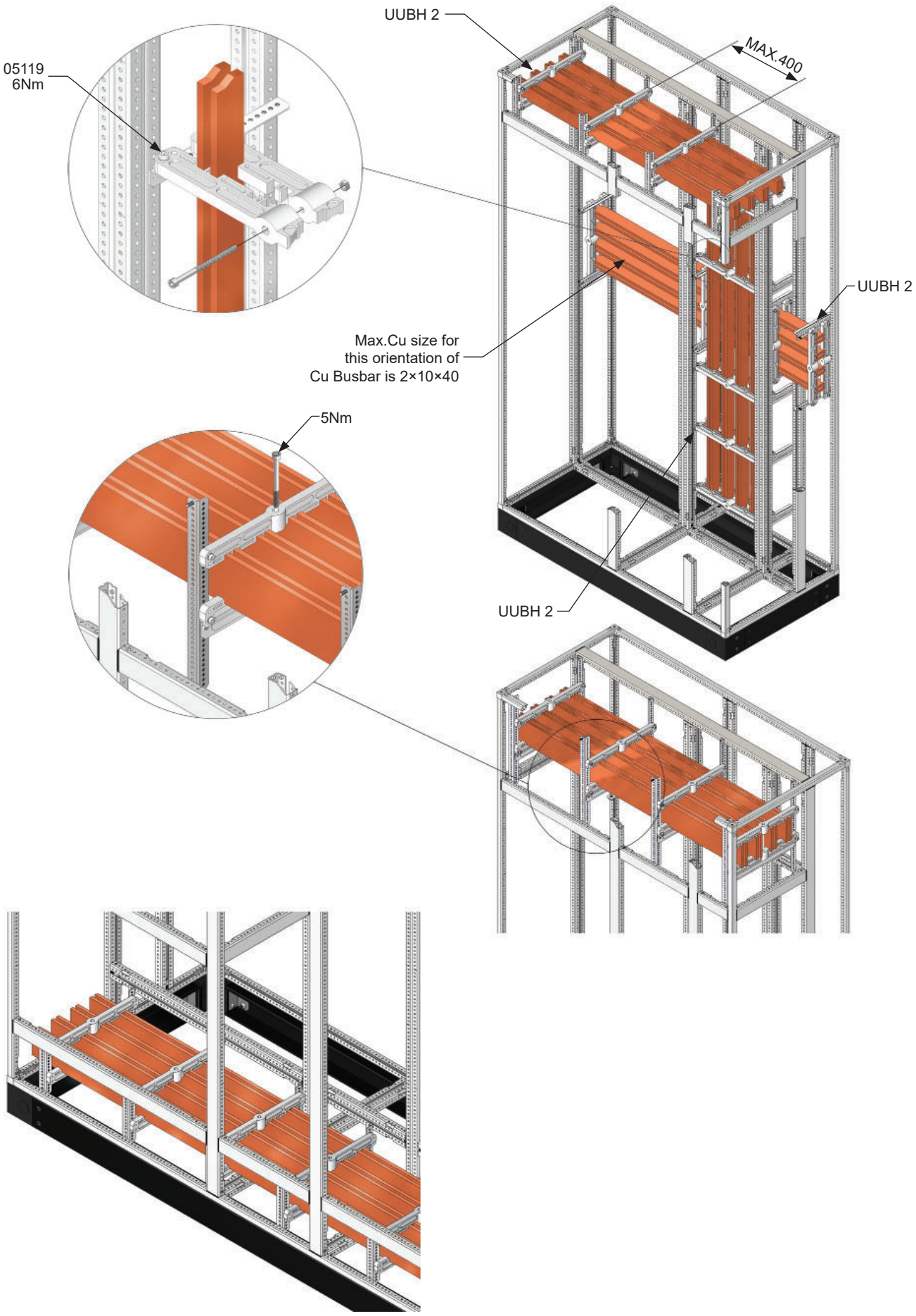

© 1997-2024 ELSTEEL. All Right Reserved

DESIGN PROTECTED

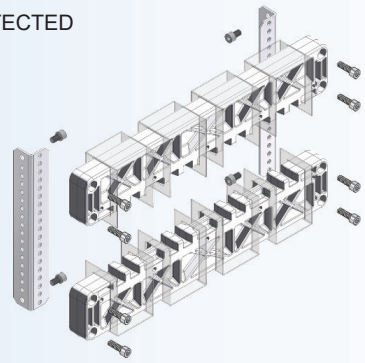

OMNI BUSBAR HOLDER 400

CAT. No.	DESCRIPTION	RAIL LENGTH	MAX. Cu SIZE	CONDUCTORS PER PHASE	PHASE CENTERS	WEIGHT (kg)	ORDER No.
UOMH 4-1	OMNI BUSBAR HOLDER 400	190	10×100	2	75	1.28	U21520

DESIGN PROTECTED

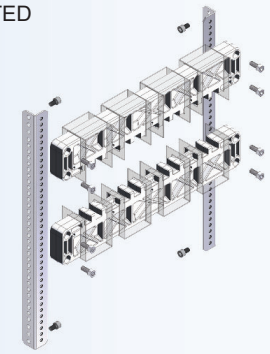

OMNI BUSBAR HOLDER 400

CAT. No.	DESCRIPTION	RAIL LENGTH	MAX. Cu SIZE	CONDUCTORS PER PHASE	PHASE CENTRES	WEIGHT (kg)	ORDER No.
UOMH 4-2	OMNI BUSBAR HOLDER 400	390	10×100	2	75	1.54	U21521

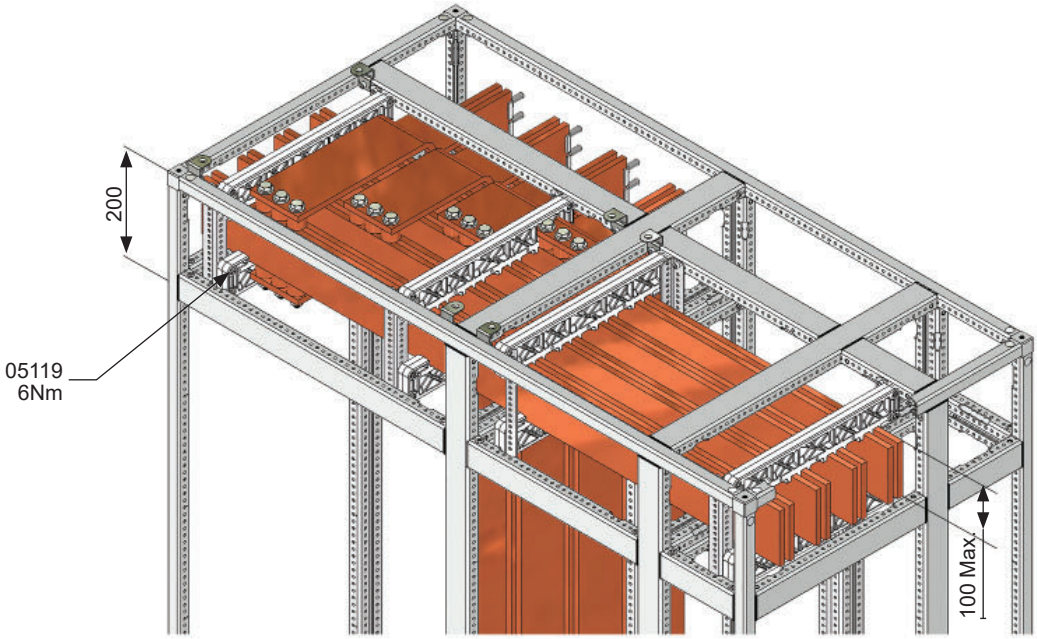

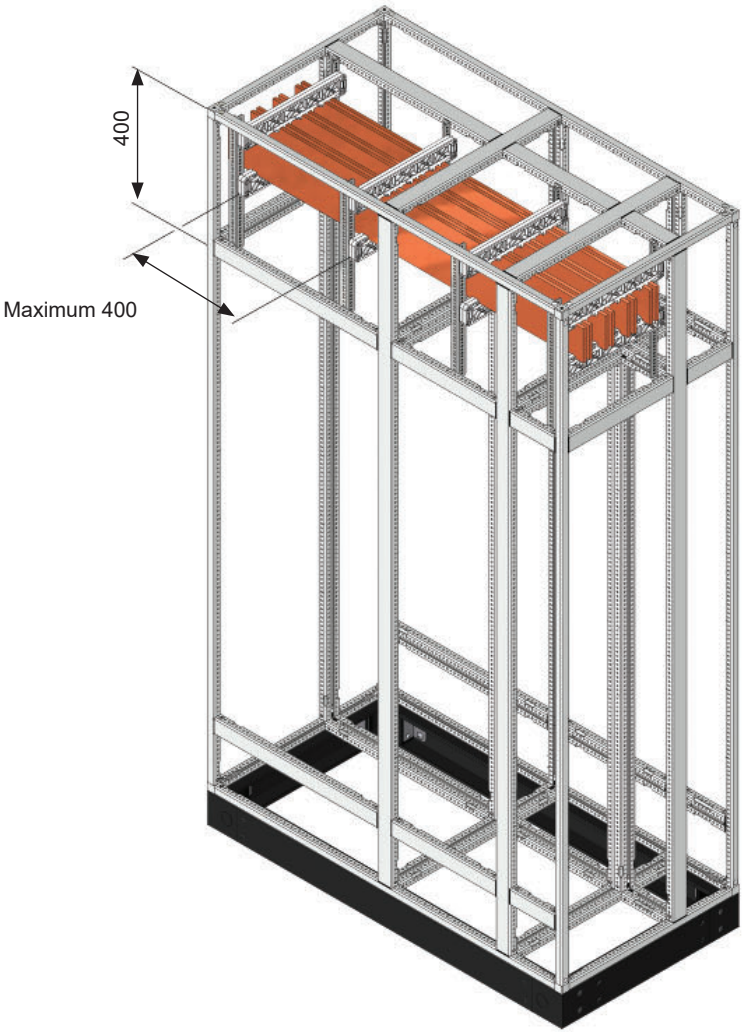

© 1997-2024 ELSTEEL. All Right Reserved

DESIGN PROTECTED

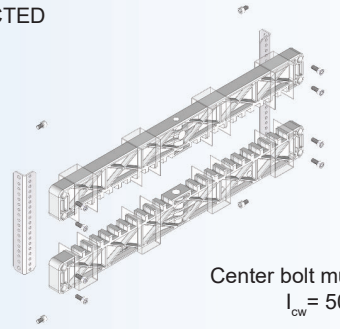

OMNI BUSBAR HOLDER 600

Center bolt must be used for I_{cw} = 50kA and higher

CAT. No.	DESCRIPTION	RAIL LENGTH	MAX. Cu SIZE	CONDUCTORS PER PHASE	PHASE CENTERS	WEIGHT (kg)	ORDER No.
UOMH 6-1	OMNI BUSBAR HOLDER 600	190	10×100	3	140	2.12	U21525

DESIGN PROTECTED

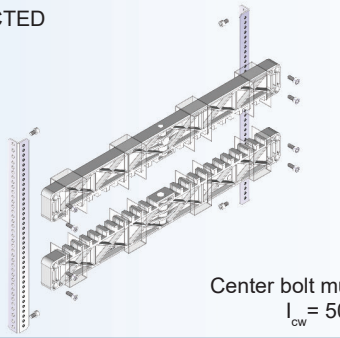

OMNI BUSBAR HOLDER 600

Center bolt must be used for I_{cw} = 50kA and higher

CAT. No.	DESCRIPTION	RAIL LENGTH	MAX. Cu SIZE	CONDUCTORS PER PHASE	PHASE CENTERS	WEIGHT (kg)	ORDER No.
UOMH 6-2	OMNI BUSBAR HOLDER 600	390	10×100	3	140	2.38	U21526

CENTER BOLT

×10 Nos.

CAT. No.	DESCRIPTION	Cu SIZE	WEIGHT (kg)	ORDER No.
UCBOL 18	CENTER BOLT M10×180	10×60	0.12	U20253
UCBOL 20	CENTER BOLT M10×200	10×80	0.14	U20254
UCBOL 22	CENTER BOLT M10×220	10×100	0.16	U20255

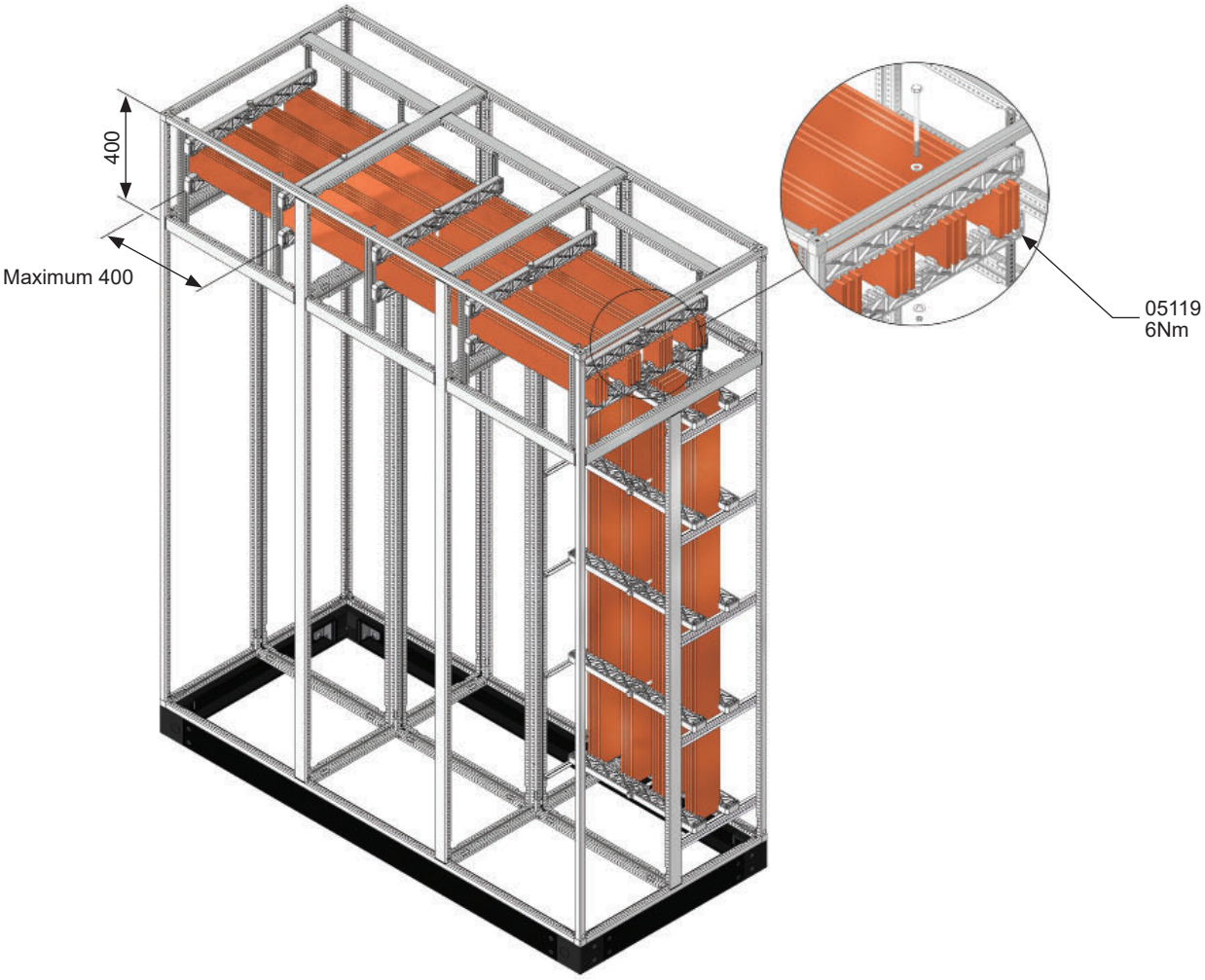

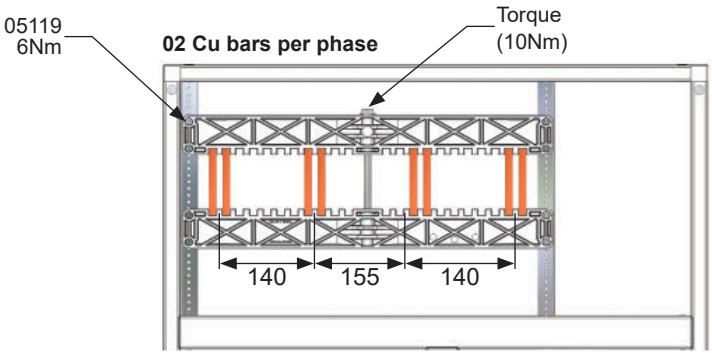

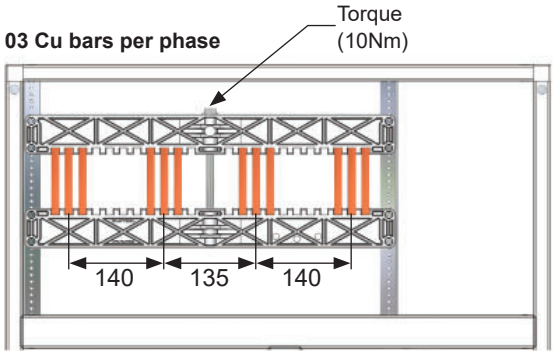

© 1997-2024 ELSTEEL. All Right Reserved

DESIGN PROTECTED

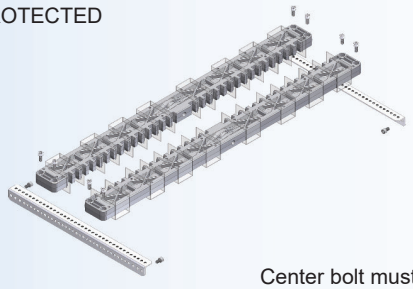

OMNI BUSBAR HOLDER 800

Center bolt must be used for
I_{cw}= 50kA and higher

CAT. No.	DESCRIPTION	RAIL LENGTH	MAX. Cu SIZE	CONDUCTORS PER PHASE	PHASE CENTERS	WEIGHT (kg)	ORDER No.
UOMH 8-1	OMNI BUSBAR HOLDER 800	190	10×100	4	80	2.75	U21530
UOMH 8-2	OMNI BUSBAR HOLDER 800	390	10×100	4	80	3.05	U21531

DESIGN PROTECTED

OMNI BUSBAR HOLDER 800

Center bolt must be used for
I_{cw}= 50kA and higher

CAT. No.	DESCRIPTION	RAIL LENGTH	MAX. Cu SIZE	CONDUCTORS PER PHASE	PHASE CENTERS	WEIGHT (kg)	ORDER No.
UOMH 8-3	OMNI BUSBAR HOLDER 800	390	10×100	6	80	4.85	U21532

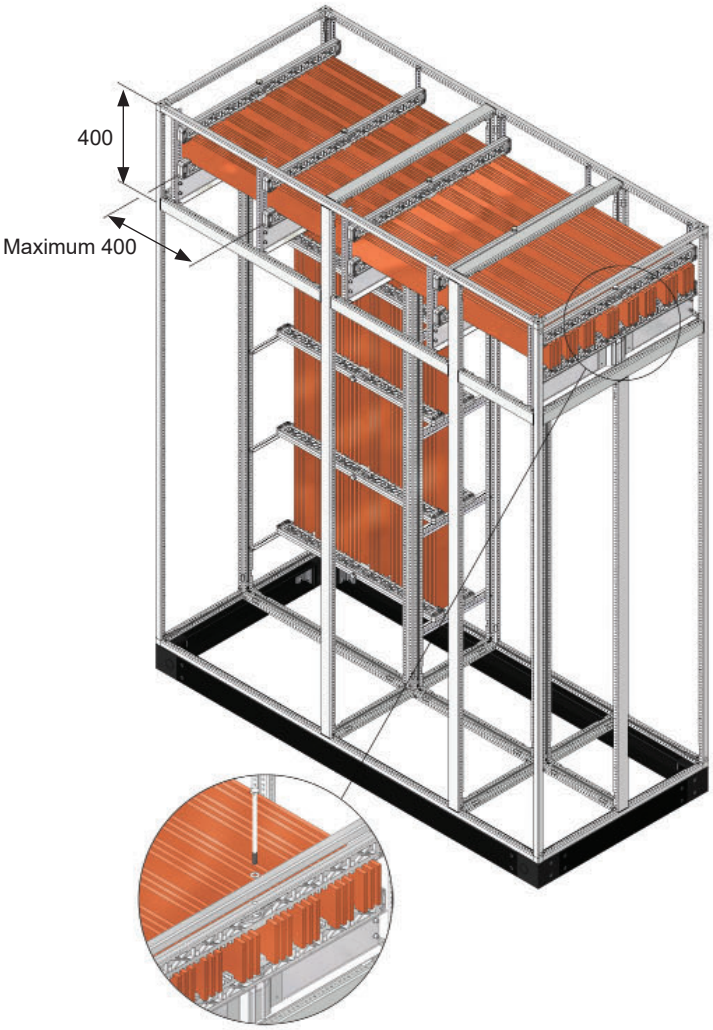

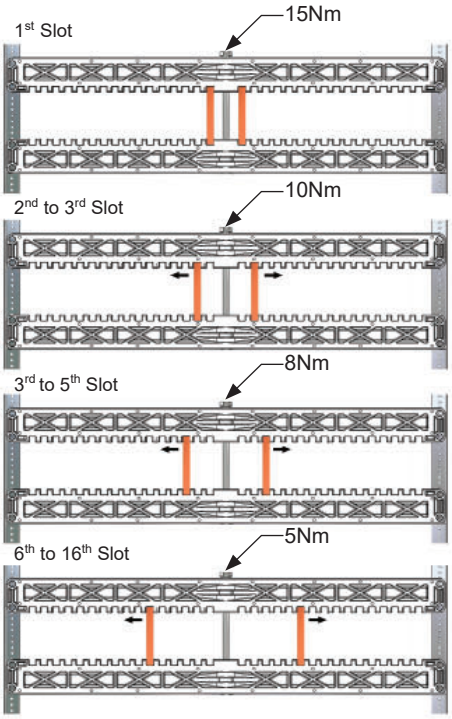

04 Cu bars per phase

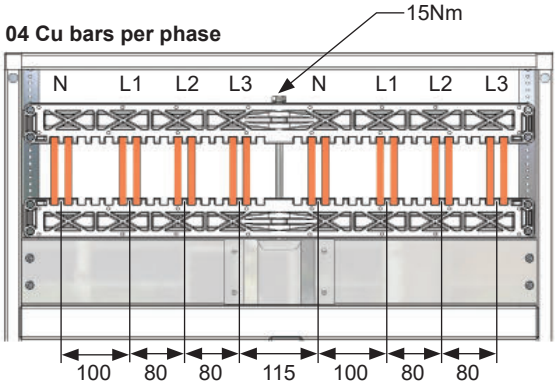

05119
6Nm

02 Cu bars per phase

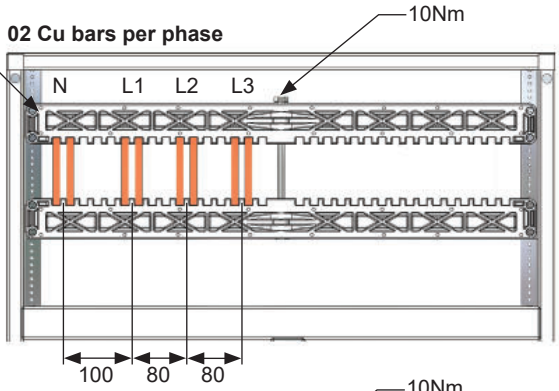

06 Cu bars per phase

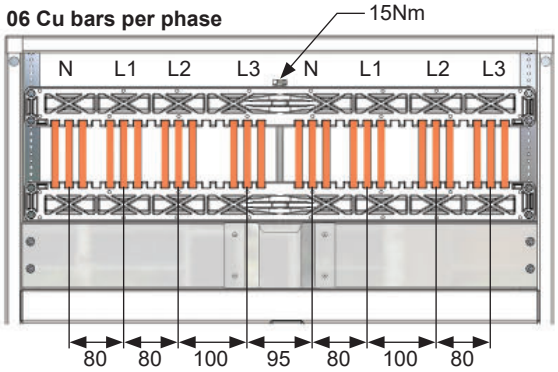

03 Cu bars per phase

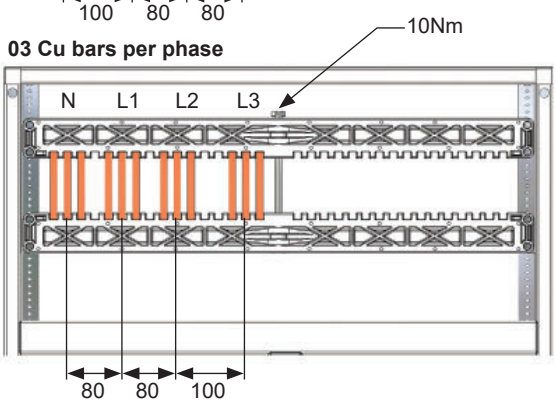

06 Cu bars per phase

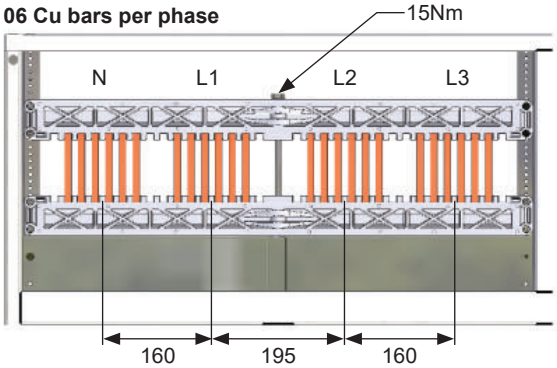

© 1997-2024 ELSTEEL. All Right Reserved

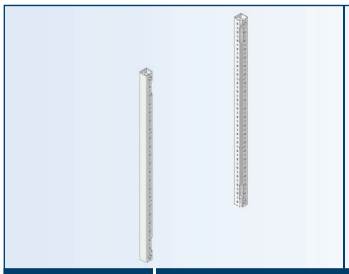

STAINLESS STEEL CORNER BARS

TYPE	DESCRIPTION	LENGTH	WEIGHT (kg)	ORDER No. AISI 304 RAL 7035 FTF.	VERSION 2 ORDER No. AISI 304 RAL 7035 FTF.
USCB 18	STAINLESS STEEL CORNER BARS	1800	6.80	U20122	U20110
USCB 20	STAINLESS STEEL CORNER BARS	2000	7.40	U20125	U20112
USCB 22	STAINLESS STEEL CORNER BARS	2200	8.30	U20128	U20114

STAINLESS STEEL CROSS BARS

CAT. No.	DESCRIPTION	LENGTH	WEIGHT (kg)	ORDER No. AISI 304 RAL 7035 SMF.
USCBS 18	STAINLESS STEEL CROSS BARS	1800	5.20	U20108
USCBS 20	STAINLESS STEEL CROSS BARS	2000	5.82	U20105
USCBS 22	STAINLESS STEEL CROSS BARS	2200	6.40	U20109

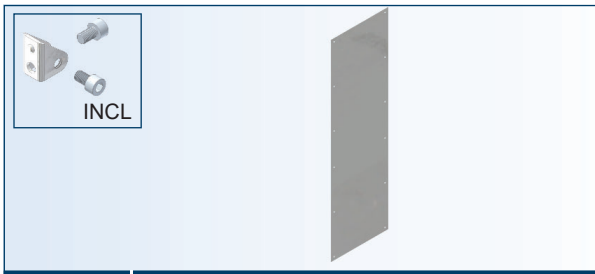

STAINLESS STEEL FLAT COVER

CAT. No.	DESCRIPTION	SIZE (W×H)	WEIGHT (kg)	ORDER No. AISI 304 RAL 7035 SMF.
USFP 4.18	STAINLESS STEEL FLAT COVER	400 × 1800	9.1	U20141
USFP 4.20	STAINLESS STEEL FLAT COVER	400 × 2000	10.1	U20144
USFP 4.22	STAINLESS STEEL FLAT COVER	400 × 2200	11.1	U20147
USFP 6.18	STAINLESS STEEL FLAT COVER	600 × 1800	13.7	U20161
USFP 6.20	STAINLESS STEEL FLAT COVER	600 × 2000	15.3	U20164
USFP 6.22	STAINLESS STEEL FLAT COVER	600 × 2200	16.8	U20167

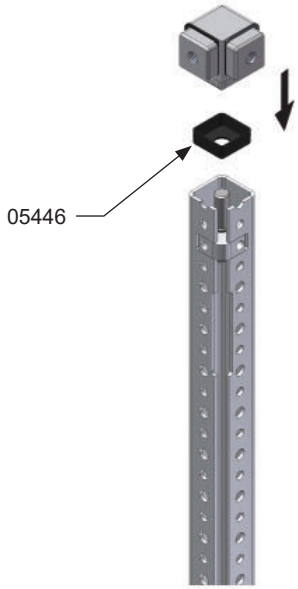

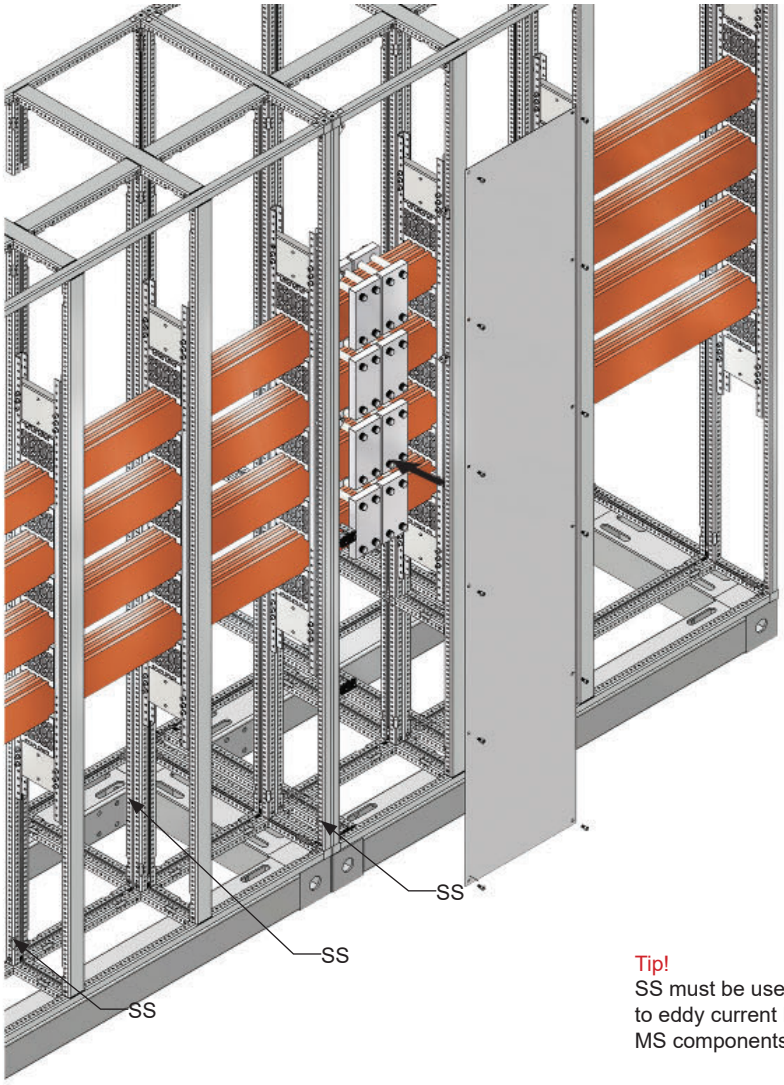

Tip!
SS must be used due to eddy current heating MS components!

MAXIMUM Cu SIZES FOR UBH/ MAB COMBINATION

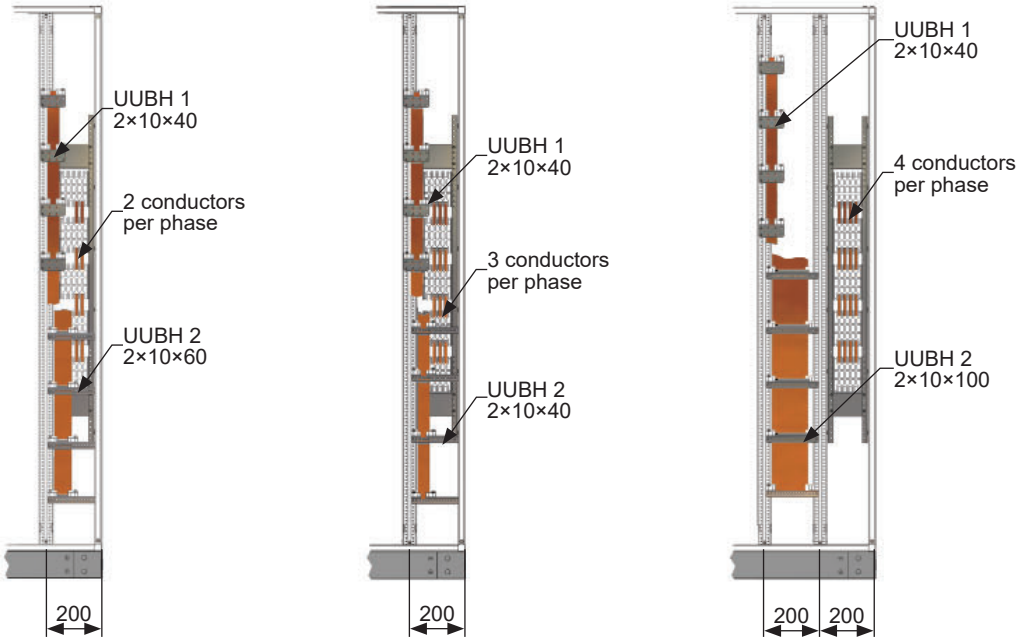

© 1997-2024 ELSTEEL. All Right Reserved

FISH PLATE KIT

FHPB 2-1
20801

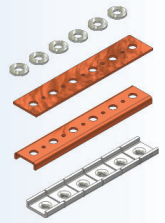

Up To 1600A

FHP 2-2
20810

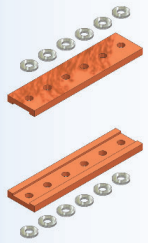

Up To 2000A

FHP 2-4
20820

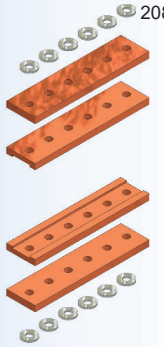

Up To 3200A

FHP 2-8
20830

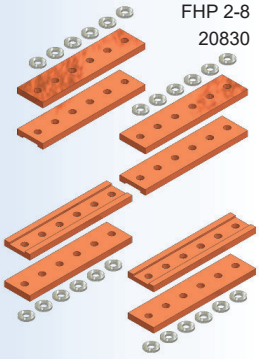

Interleaved BB
4000A/5000A

FHP 2-12
20862

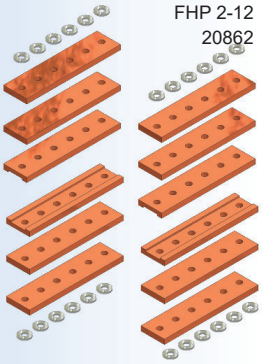

Interleaved BB
7100A

FHPB 3-4
20841

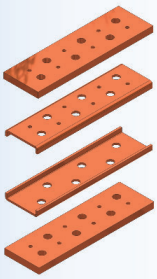

4000A

FHPB 3-8
20853

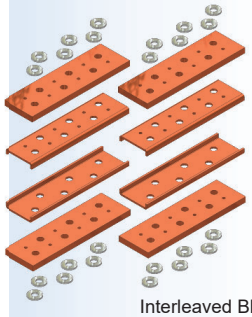

Interleaved BB
6300A

FHP 4-4
20850

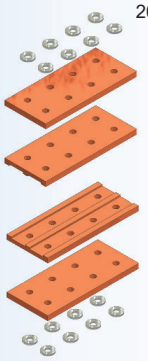

4000A/5000A

FHP 4-8
20860

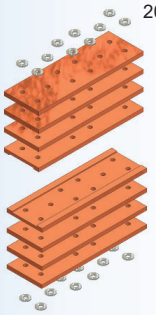

7100A

CAT. No.	DESCRIPTION	RATED CURRENT (A)	NO. OF CONDUCTORS	WEIGHT (kg)	ORDER No.
UFHPB 2-1	FISH PLATE KIT	1600	2	1.12	U20801
UFHP 2-2	FISH PLATE KIT	2000	2	1.93	U20810
UFHP 2-4	FISH PLATE KIT	3200	2	3.86	U20820
UFHP 2-8	FISH PLATE KIT	5000	2×2	7.20	U20830
UFHP 2-12	FISH PLATE KIT	7100	2×2	19.30	U20862
UFHPB 3-4	FISH PLATE KIT	4000	3	6.20	U20841
UFHPB 3-8	FISH PLATE KIT	6300	3×3	12.40	U20853
UFHP 4-4	FISH PLATE KIT	5000	4	6.90	U20850
UFHP 4-8	FISH PLATE KIT	7100	4	10.01	U20860

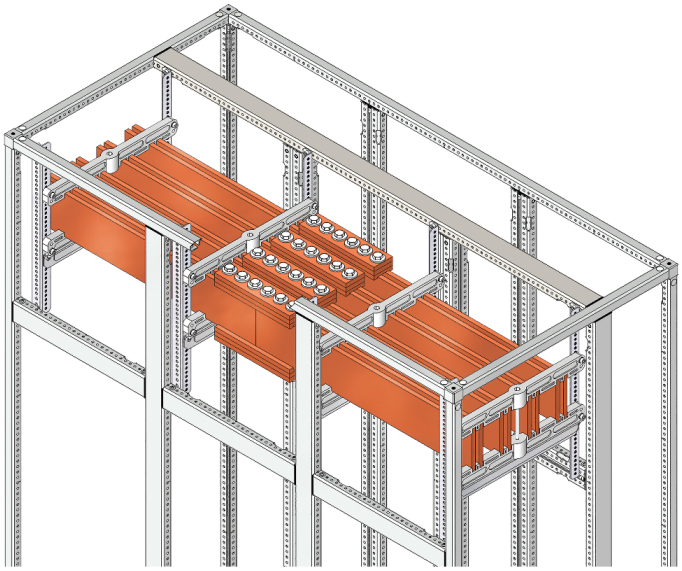

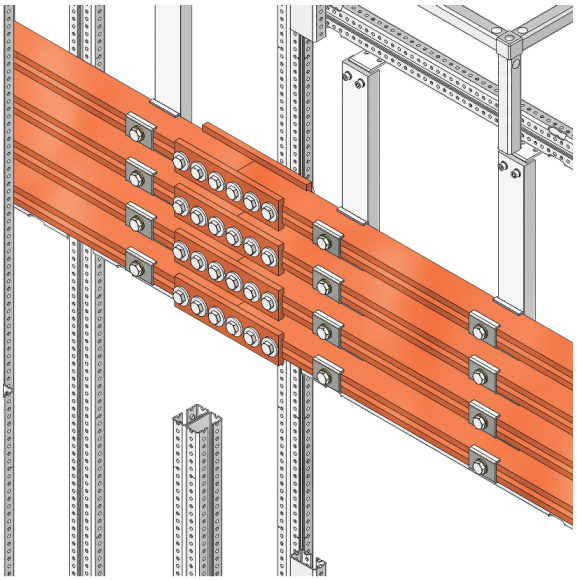

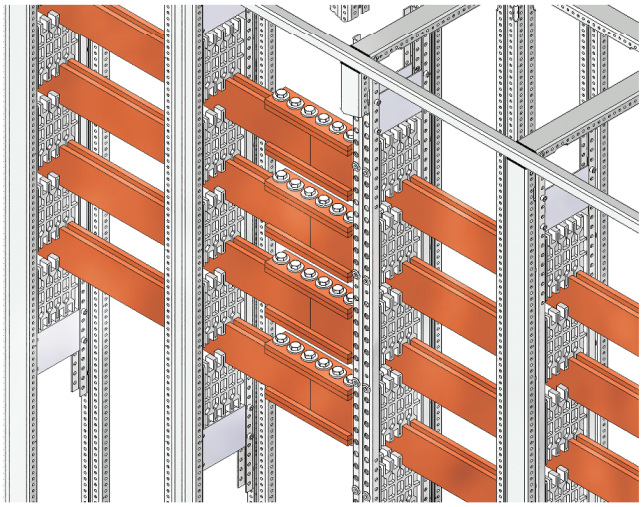

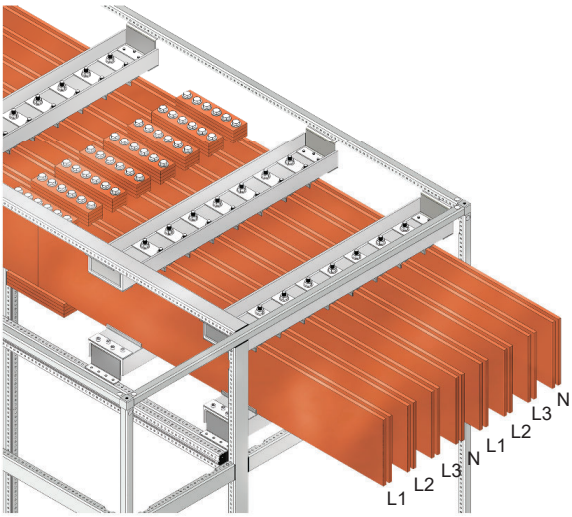

Note: Use UFHPB 2-1, UFHP 2-2, UFHP 2-4 & 2500A with MAB busbar systems.
For higher current rating use busbar clamps

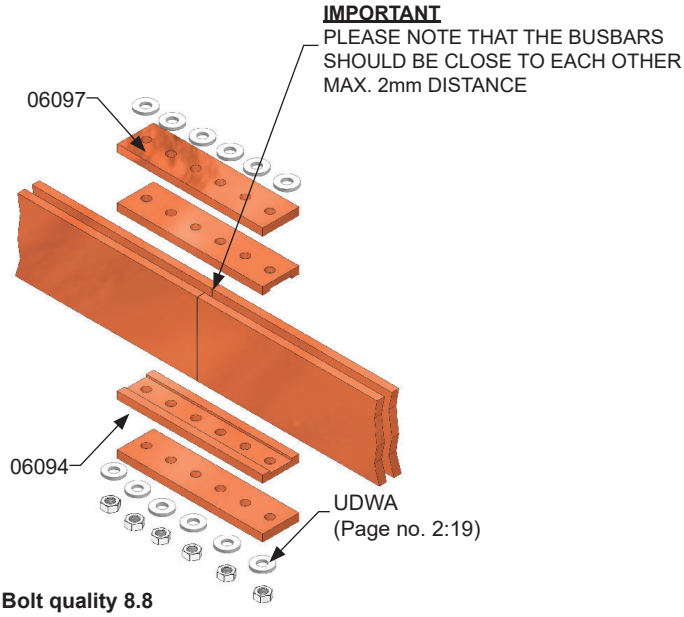

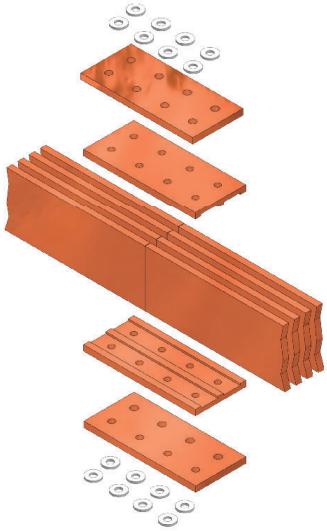

Bolt quality 8.8
Torque 47 Nm
Hex.bolt (M10) length = Height of busbars + 20mm

© 1997-2024 ELSTEEL. All Right Reserved

COPPER SPACER

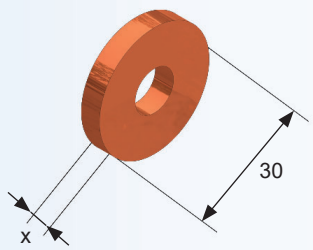

× 04 Nos.

CAT. No.	DESCRIPTION	HEIGHT X	WEIGHT (kg)	ORDER No.
UCS 5	COPPER SPACER	5	0.02	U21300
UCS 10	COPPER SPACER	10	0.05	U21310
UCS 15	COPPER SPACER	15	0.08	U21320
UCS 20	COPPER SPACER	20	0.11	U21330
UCS 25	COPPER SPACER	25	0.14	U21340
UCS 30	COPPER SPACER	30	0.17	U21350
UCS 35	COPPER SPACER	35	0.19	U21360
UCS 40	COPPER SPACER	40	0.22	U21370
UCS 45	COPPER SPACER	45	0.25	U21380
UCS 50	COPPER SPACER	50	0.28	U21390

COPPER SPACER

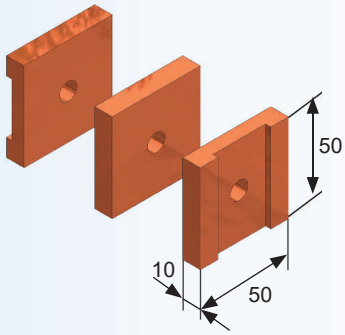

× 04 Nos.

CAT. No.	DESCRIPTION	WEIGHT (kg)	ORDER No.
UCSS	COPPER SPACER	0.57	U21410

HORIZONTAL TO VERTICAL CONNECTOR

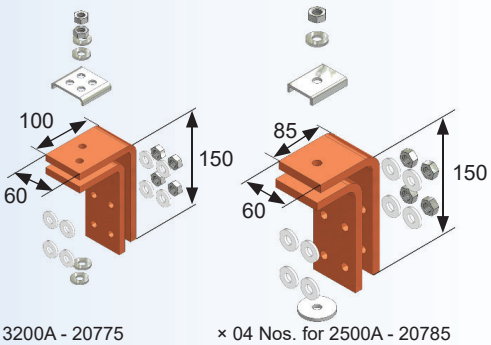

× 04 Nos. for 3200A - 20775
× 16 Nos. for 6300A - 20790

× 04 Nos. for 2500A - 20785
× 16 Nos. for 4000A/5000A - 20780

CAT. No.	DESCRIPTION	RATED CURRENT (A)	NO. OF CONDUCTORS	WEIGHT (kg)	ORDER No.
UHVC 25	H TO V CONNECTORS	2500	2	8.75	U20785
UHVC 32	H TO V CONNECTORS	3200	3	8.75	U20775
UHVC 40-50	H TO V CONNECTORS	4000/ 5000	2×2	35.00	U20780
UHVC 63	H TO V CONNECTORS	6300	3×2	35.31	U20790

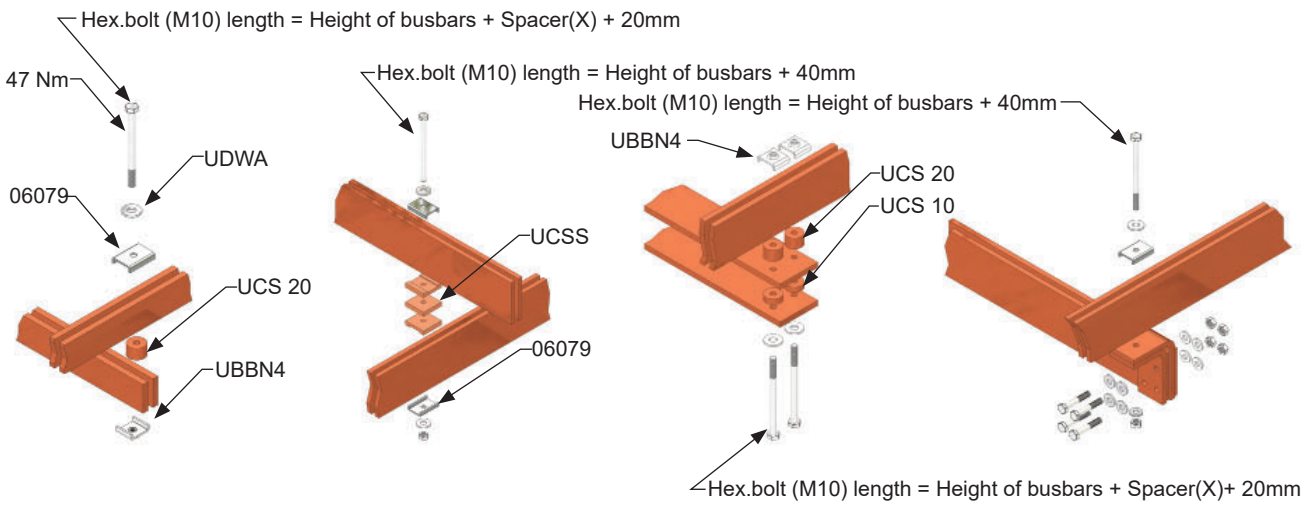

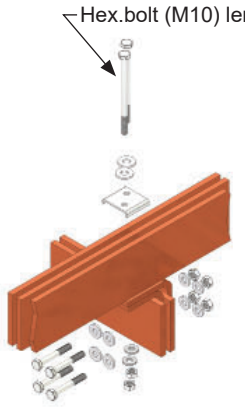

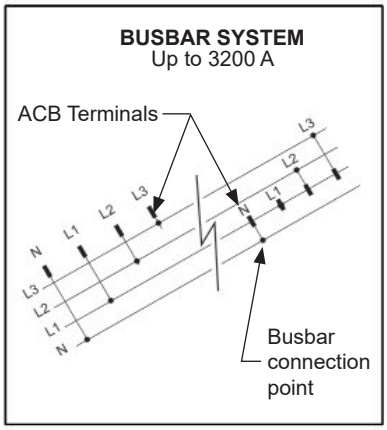

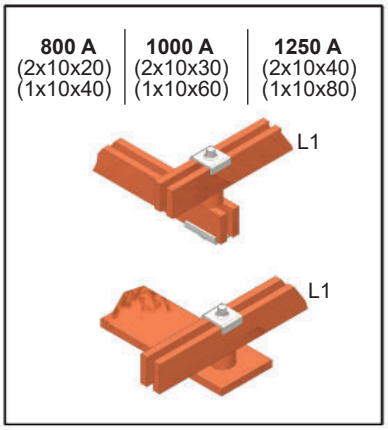

Bolt Quality 8.8

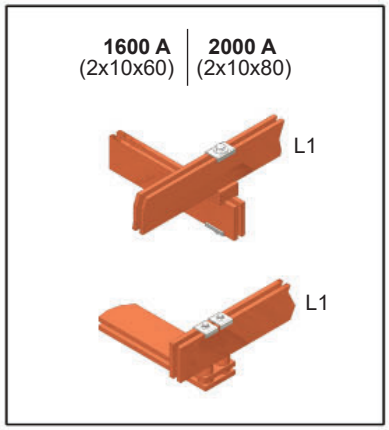

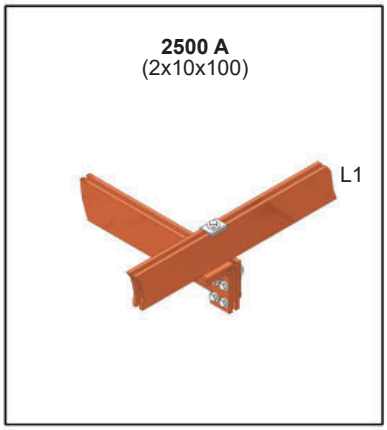

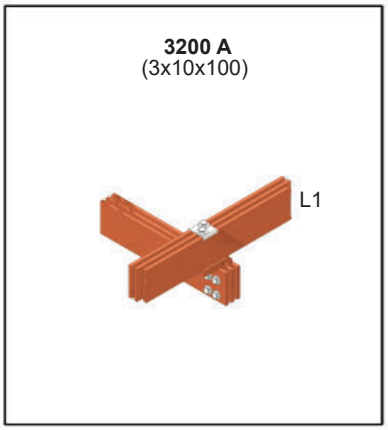

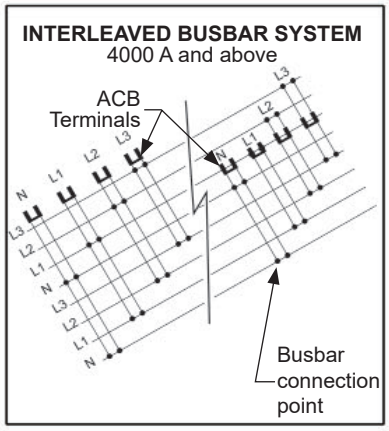

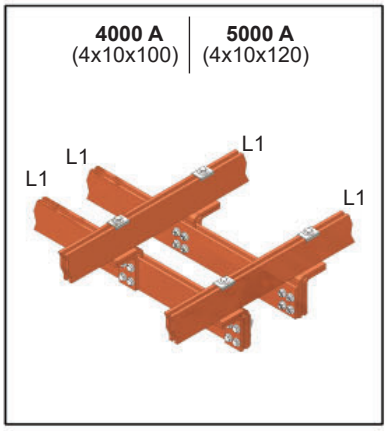

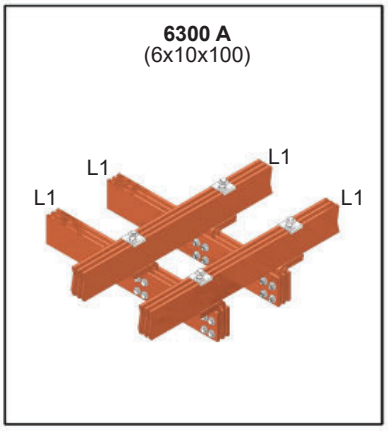

© 1997-2024 ELSTEEL. All Right Reserved

HORIZONTAL TO VERTICAL CONNECTOR

UHTVC 2.2-1
20880

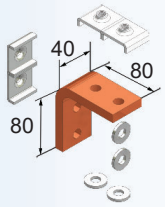

x 4 Nos.

UHTVC 2.2-2
20881

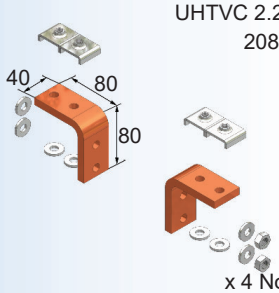

x 4 Nos.

UHTVC 3.2-1
20882

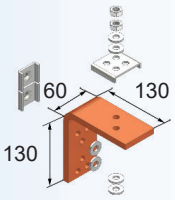

x 4 Nos.

UHTVC 3.2-2
20883

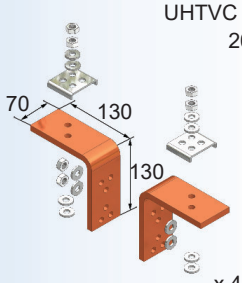

x 4 Nos.

UHTVC 3.3
20884

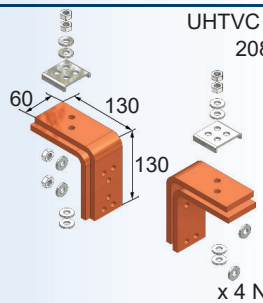

x 4 Nos.

UHTVC 4.4
20888

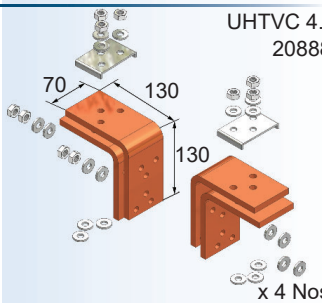

x 4 Nos.

CAT. No.	DESCRIPTION	RATED CURRENT (A)	NO. OF CONDUCTORS	WEIGHT (kg)	ORDER No.
UHTVC 2.2-1	H TO V CONNECTOR	2000	2×2	2.84	U20880
UHTVC 2.2-2	H TO V CONNECTOR	2500	2×2	5.11	U20881
UHTVC 3.2-1	H TO V CONNECTOR	2000	3×2	6.00	U20882
UHTVC 3.2-2	H TO V CONNECTOR	2500	3×2	11.36	U20883
UHTVC 3.3	H TO V CONNECTOR	3200	3×3	20.75	U20884
UHTVC 4.4	H TO V CONNECTOR	4000	4×4	24.60	U20888

2 to 2 Busbar connection
up to 2000A

UHTVC 2.2-1

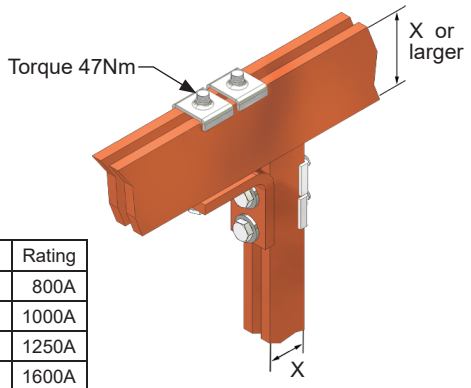

X	Rating
20	800A
30	1000A
40	1250A
60	1600A
60*	2000A
80	2000A

2 to 2 Busbar connection
up to 2500A

UHTVC 2.2-2

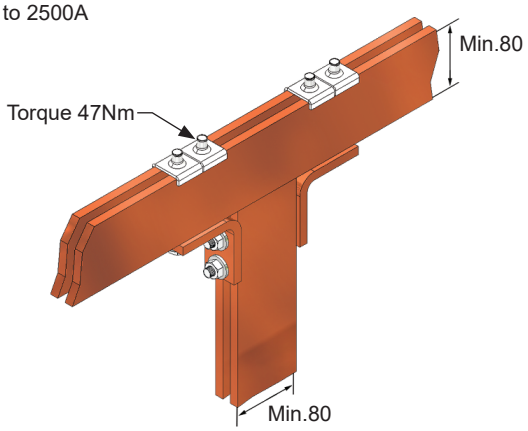

3 to 2 Busbar connection
up to 2000A

UHTVC 3.2-1

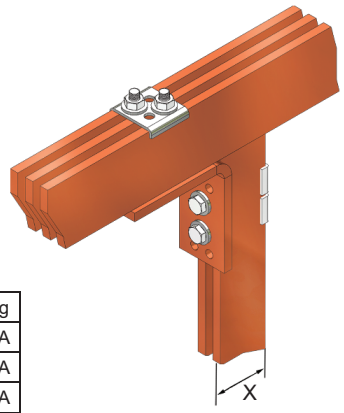

X	Rating
40	1250A
60	1600A
60*	2000A
80	2000A

3 to 2 Busbar connection
up to 2500A

UHTVC 3.2-2

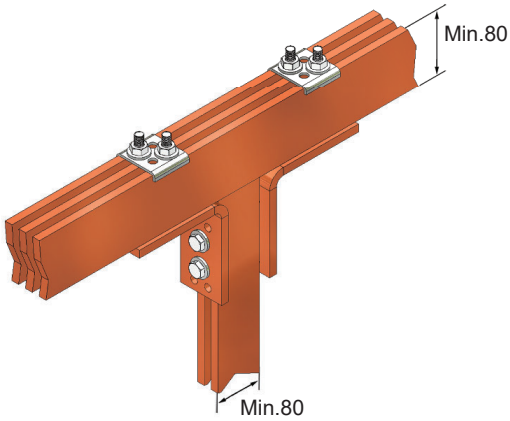

3 to 3 Busbar connection
up to 3200A

UHTVC 3.3

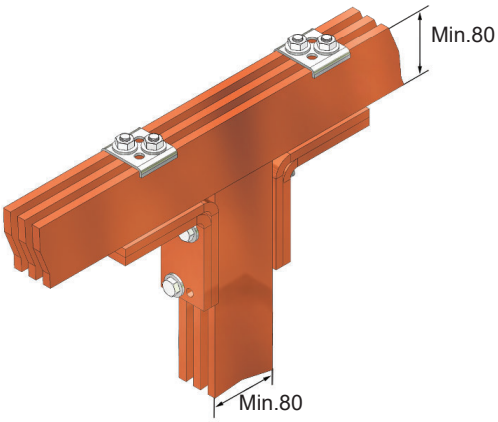

4 to 4 Busbar connection
up to 4000A

UHTVC 4.4

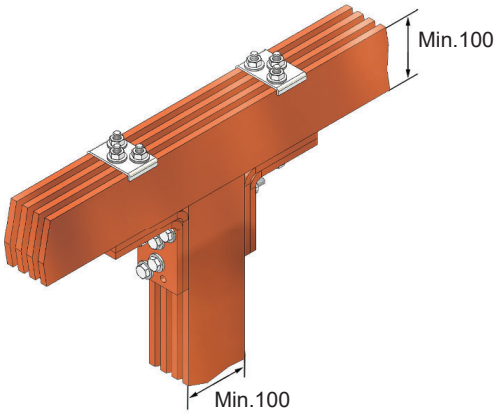

Hex.bolt (M10) length = Height of busbar + Thickness of H2V+ 20mm

Bolt quality 8.8
Torque 47Nm
*Applicable only when fitted at bottom in II Cu orientation or as vertical dropper

© 1997-2024 ELSTEEL. All Right Reserved

BUSBAR TAP OFF ACCESSORIES

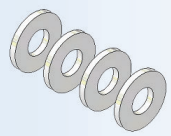

UDWA
21000

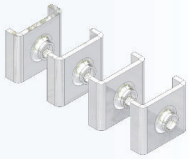

UBBN4
21032

Max. FB 630A
Cable Size - 120mm²
Minimum Busbar size 10×20

UTOS
21012

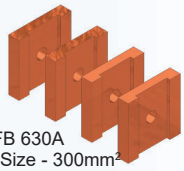

Max. FB 630A
Cable Size - 300mm²

UHTOS1
21026

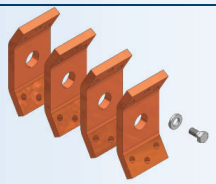

UTOB
21020

CAT. No.	DESCRIPTION	SIZE	WEIGHT (kg)	ORDER No.
UDWA	CONICAL SPRING WASHER DIN 6796	M10	0.03	U21000
UBBN4	BUSBAR NUT 4 mm	M10	0.21	U21032
UTOS	TAP OFF SET Cu		0.09	U21012
UTOB	TAP OFF BRACKET Cu		0.33	U21020
UHTOS1	HEAVY DUTY TAP OFF SET Cu		0.88	U21026

BUSBAR TAP OFF PACK

DWAP
21002

x200 Nos.

BBNP4
21006

x200 Nos.

TOSP
21003

x200 Nos.

CAT. No.	DESCRIPTION	SIZE	WEIGHT (kg)	ORDER No.
UDWAP	CONICAL SPRING WASHER DIN 6796 PACK	M10	1.20	U21002
UBBNP 4	BUSBAR NUT 4mm PACK	M10	6.60	U21006
UTOSP	TAP OFF SET 10×20 PACK		4.80	U21003

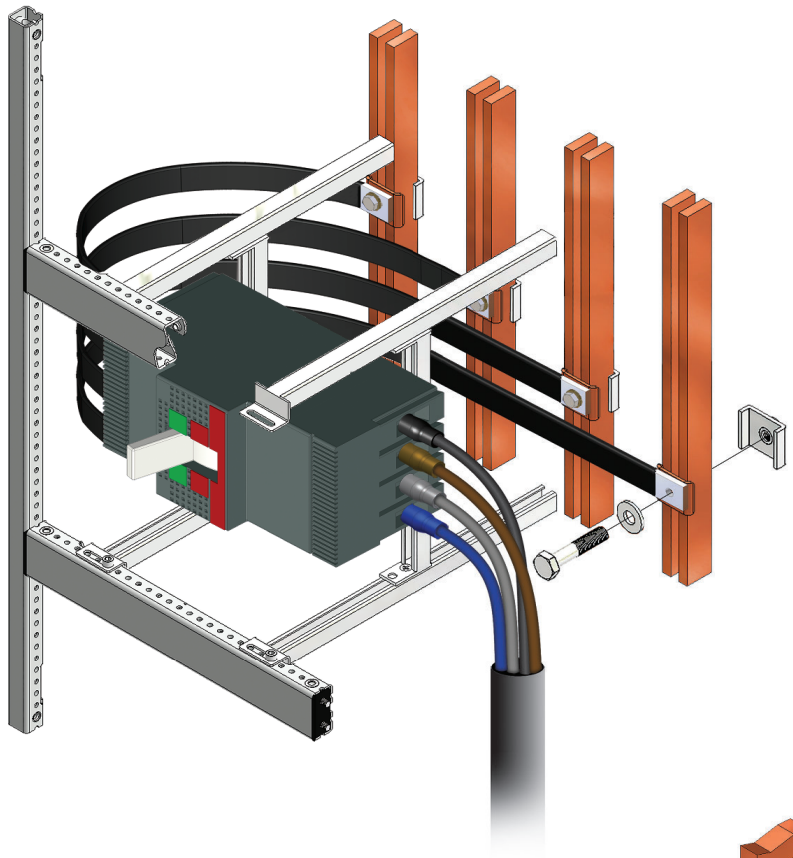

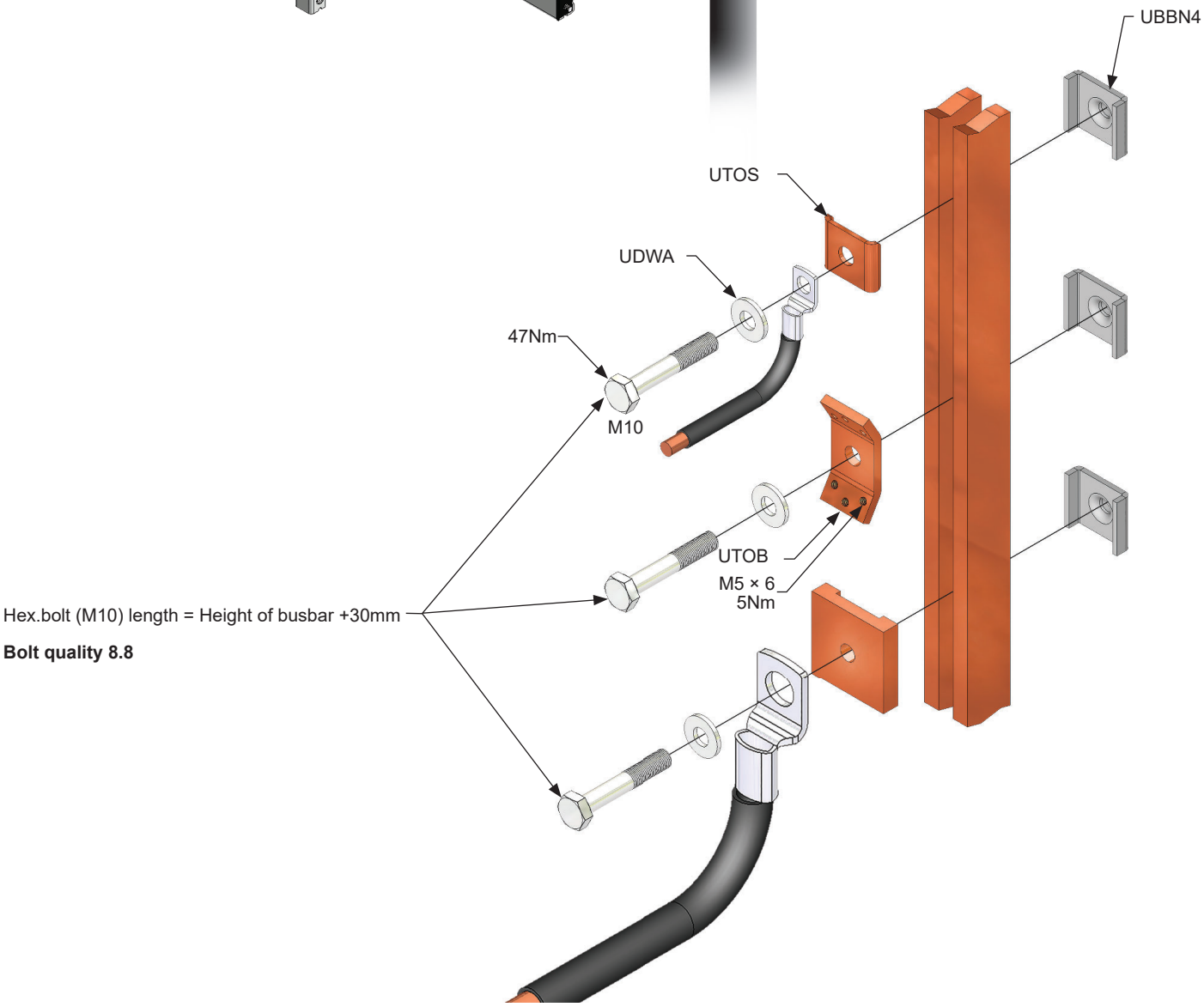

© 1997-2024 ELSTEEL. All Right Reserved

EARTH BRACKET

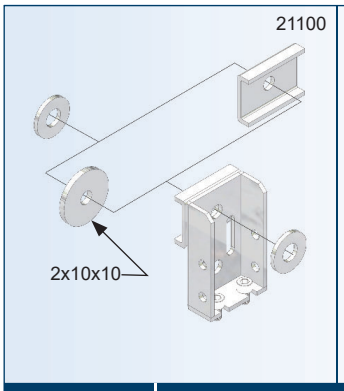

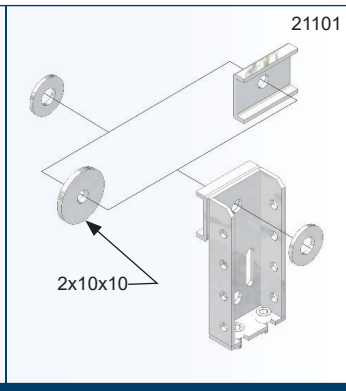

CAT. No.	DESCRIPTION	Max. Cu SIZE	WEIGHT (kg)	ORDER No. Zinc plated
UBEC	EARTH BRACKET	Min.2×10×10 Max.2×10×60	0.32	U21100
UBECN	EARTH BRACKET WITH NEUTRAL	Min.2×10×10 Max.2×10×60	0.38	U21101

EARTH BRACKET/

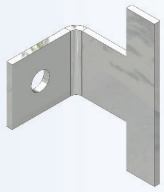

CAT. No.	DESCRIPTION	CONDUCTOR SIZE	WEIGHT (kg)	ORDER No. Zinc plated
UEB	EARTH BRACKET	1×10×5	0.05	U21200

HEAVY DUTY EARTH BAR CLAMP

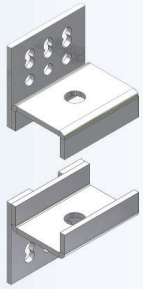

x 4 Nos.

CAT. No.	DESCRIPTION	Max. Cu SIZE	WEIGHT (kg)	ORDER No. Zinc plated
UEBC	HEAVY DUTY EARTH BAR CLAMP	2×10×60 2×10×80 2×10×100	0.21	U21116

INSULATOR

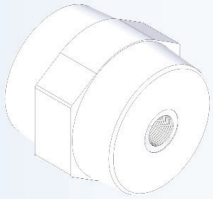

50 kA Max.

CAT. No.	DESCRIPTION	SIZE	WEIGHT (kg)	ORDER No. Zinc plated
UINS 1	INSULATOR	M8 × 45	0.10	U21139
UINS 2	INSULATOR	M10 × 45	0.10	U21140
UINS 3	INSULATOR	M12 × 45	0.10	U21141

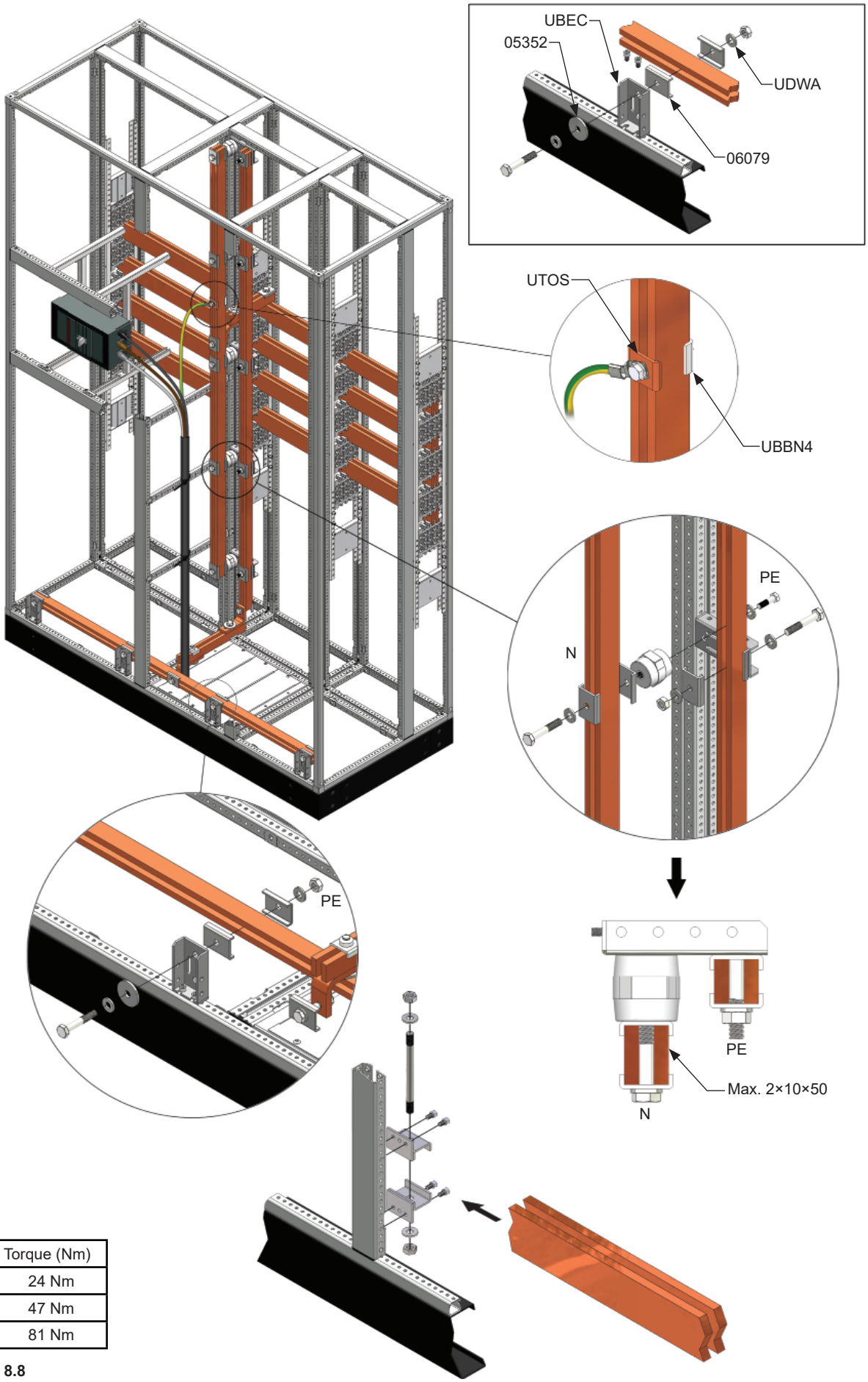

Bolt Size	Torque (Nm)
M8	24 Nm
M10	47 Nm
M12	81 Nm

Bolt Quality 8.8

© 1997-2024 ELSTEEL. All Right Reserved

DESIGN PROTECTED

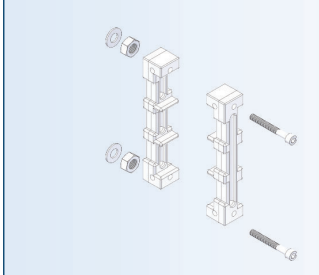

FCSH 3

DESIGN PROTECTED

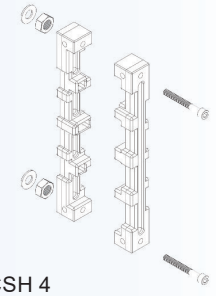

FCSH 4

FLEXI Cu SUPPORT HOLDER

CAT. No.	DESCRIPTION	NO OF POLES	I_{cc}	WEIGHT (kg)	ORDER No.
UFCSH 3	FLEXI Cu SUPPORT HOLDER	3	50 kA	0.144	U21164
UFCSH 4	FLEXI Cu SUPPORT HOLDER	4	50 kA	0.206	U21163

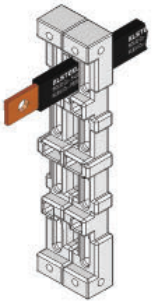

125/160/250 A

400 A

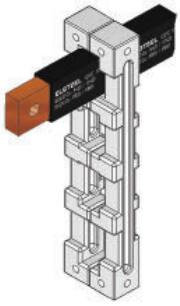

630 A

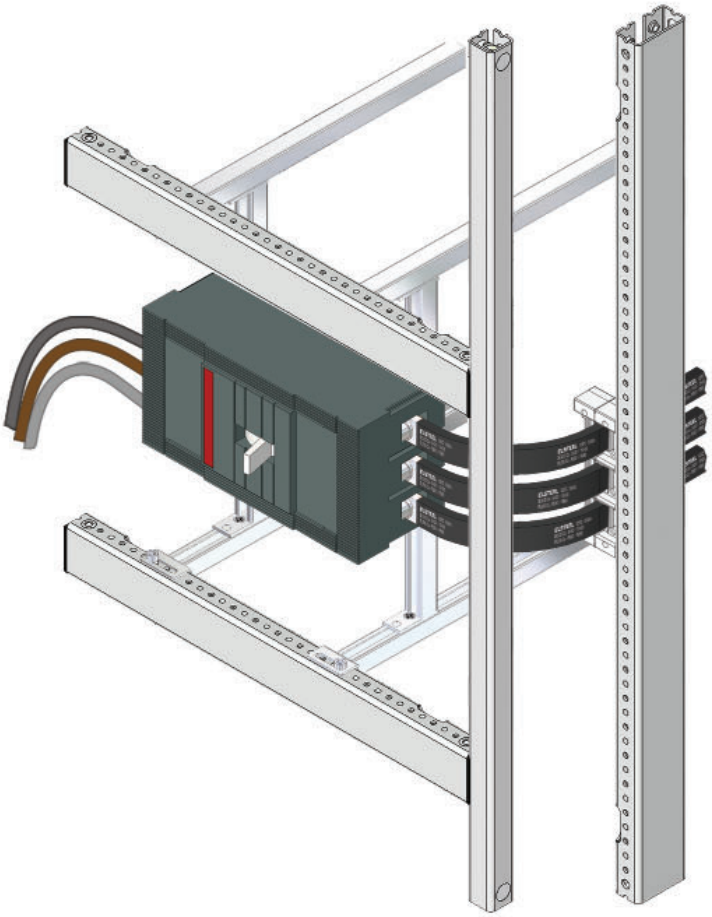

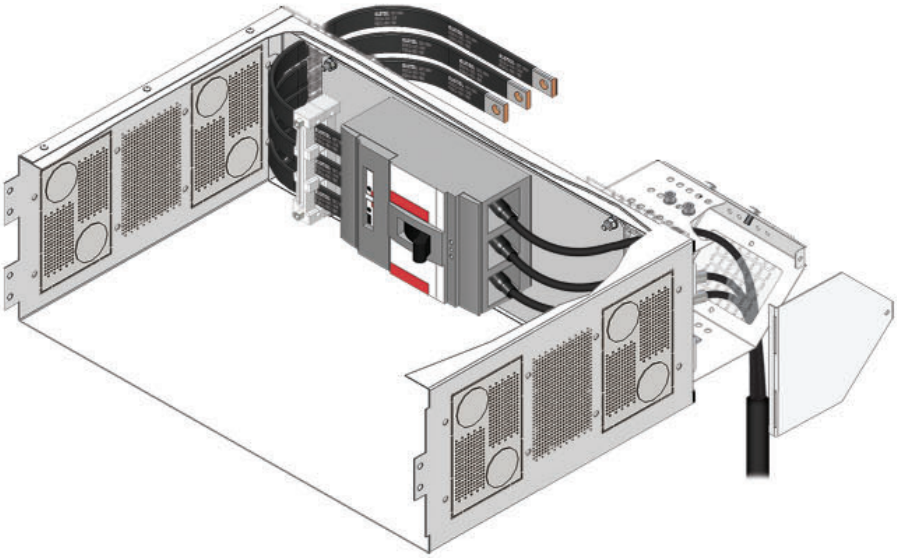

*See page 6:22 Braided Cu Flexi - Bar selection guide

© 1997-2024 ELSTEEL. All Right Reserved

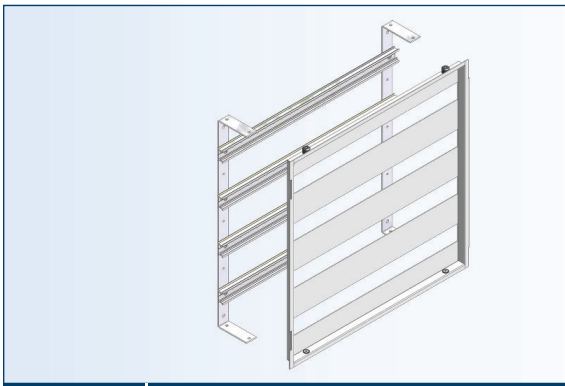

STEEL DIN RAIL INSERT

CAT. No.	DESCRIPTION	ROWS+UNITS	SIZE (W×H)	WEIGHT (kg)	VERSION 3 ORDER No. RAL 7035 FTF.
UDINI 4.2	STEEL DIN RAIL INSERT	1 × 18	400 × 200	1.34	U30052
UDINI 4.4	STEEL DIN RAIL INSERT	2 × 18	400 × 400	2.58	U30072
UDINI 4.6	STEEL DIN RAIL INSERT	4 × 18	400 × 600	3.79	U30092
UDINI 4.8	STEEL DIN RAIL INSERT	6 × 18	400 × 800	5.04	U30106
UDINI 4.10	STEEL DIN RAIL INSERT	7 × 18	400 × 1000	6.32	U30116
UDINI 6.2	STEEL DIN RAIL INSERT	1 × 29	600 × 200	1.45	U30142
UDINI 6.4	STEEL DIN RAIL INSERT	2 × 29	600 × 400	3.47	U30154
UDINI 6.6	STEEL DIN RAIL INSERT	4 × 29	600 × 600	5.72	U30172
UDINI 6.8	STEEL DIN RAIL INSERT	6 × 29	600 × 800	7.58	U30196
UDINI 6.10	STEEL DIN RAIL INSERT	7 × 29	600 × 1000	9.42	U30199

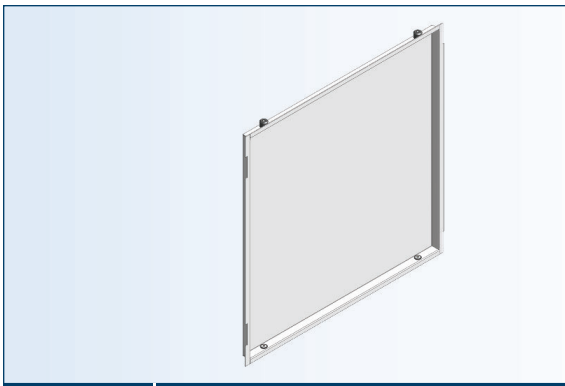

STEEL BLANK FRONT PLATE

CAT. No.	DESCRIPTION	SIZE (W×H)	WEIGHT (kg)	VERSION 3 ORDER No. RAL 7035 FTF.
UBLFP 4.2	STEEL BLANK FRONT PLATE	400 × 200	0.85	U30354
UBLFP 4.4	STEEL BLANK FRONT PLATE	400 × 400	1.77	U30375
UBLFP 4.6	STEEL BLANK FRONT PLATE	400 × 600	2.55	U30394
UBLFP 4.8	STEEL BLANK FRONT PLATE	400 × 800	3.54	U30406
UBLFP 4.10	STEEL BLANK FRONT PLATE	400 ×1000	4.59	U30418
UBLFP 6.2	STEEL BLANK FRONT PLATE	600 × 200	1.24	U30444
UBLFP 6.4	STEEL BLANK FRONT PLATE	600 × 400	3.46	U30454
UBLFP 6.6	STEEL BLANK FRONT PLATE	600 × 600	4.13	U30474
UBLFP 6.8	STEEL BLANK FRONT PLATE	600 × 800	5.25	U30497
UBLFP 6.10	STEEL BLANK FRONT PLATE	600 ×1000	6.89	U30499

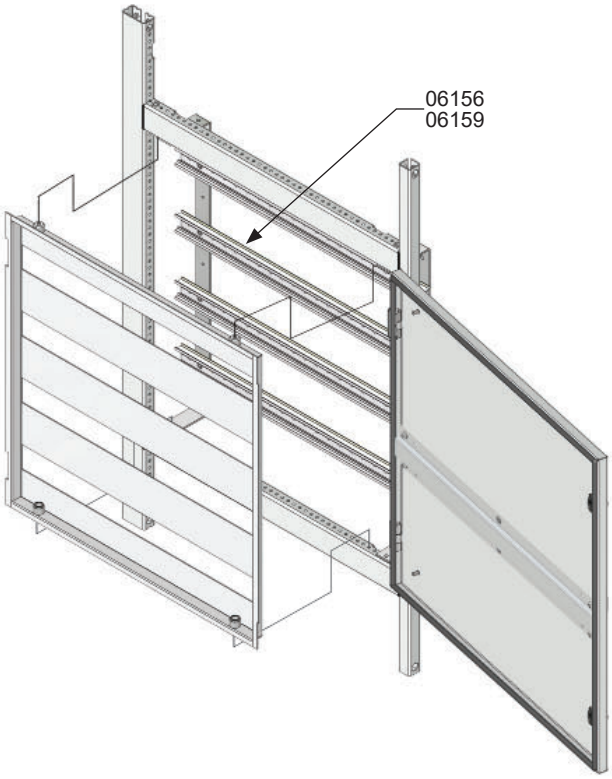

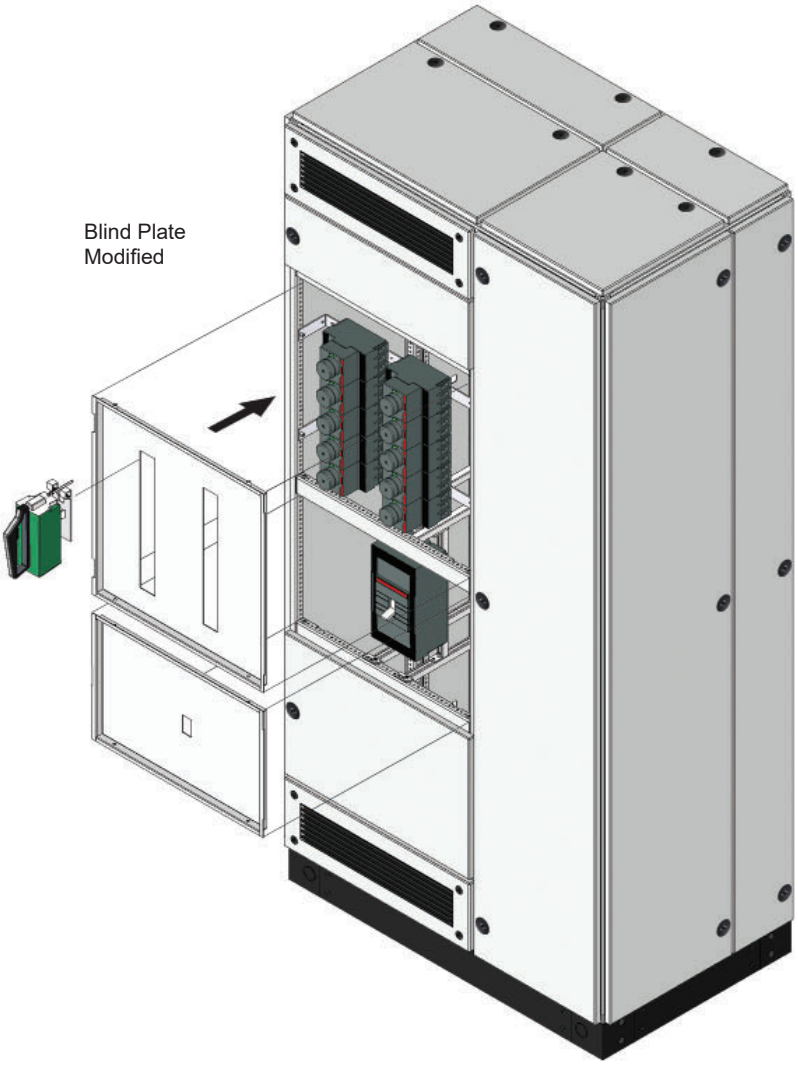

© 1997-2024 ELSTEEL. All Right Reserved

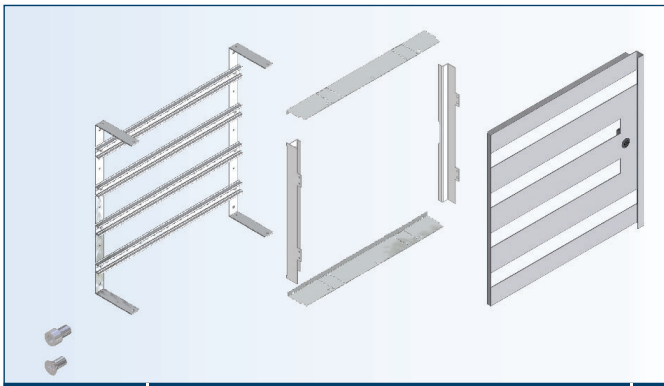

STEEL DIN RAIL INSERT WITH ESCUTCHEON DOOR

CAT. No.	DESCRIPTION	ROWS+UNITS	SIZE (W×H)	WEIGHT (kg)	ORDER No. RAL 9010 SMF	ORDER No. RAL 7035 FTF
UDINIE 4.2	STEEL DIN RAIL INSERT WITH ESCUTCHEON DOOR	1 × 18	400 × 200	0.53	U30560	U30570
UDINIE 4.4	STEEL DIN RAIL INSERT WITH ESCUTCHEON DOOR	2 × 18	400 × 400	0.86	U30561	U30571
UDINIE 4.6	STEEL DIN RAIL INSERT WITH ESCUTCHEON DOOR	4 × 18	400 × 600	1.17	U30562	U30572
UDINIE 4.8	STEEL DIN RAIL INSERT WITH ESCUTCHEON DOOR	6 × 18	400 × 800	1.52	U30563	U30573
UDINIE 4.10	STEEL DIN RAIL INSERT WITH ESCUTCHEON DOOR	7 × 18	400 × 1000	1.90	U30564	U30574
UDINIE 6.2	STEEL DIN RAIL INSERT WITH ESCUTCHEON DOOR	1 × 29	600 × 200	0.21	U30565	U30575
UDINIE 6.4	STEEL DIN RAIL INSERT WITH ESCUTCHEON DOOR	2 × 29	600 × 400	0.85	U30566	U30576
UDINIE 6.6	STEEL DIN RAIL INSERT WITH ESCUTCHEON DOOR	4 × 29	600 × 600	1.73	U30567	U30577
UDINIE 6.8	STEEL DIN RAIL INSERT WITH ESCUTCHEON DOOR	6 × 29	600 × 800	2.22	U30568	U30578
UDINIE 6.10	STEEL DIN RAIL INSERT WITH ESCUTCHEON DOOR	7 × 29	600 × 1000	2.69	U30569	U30579

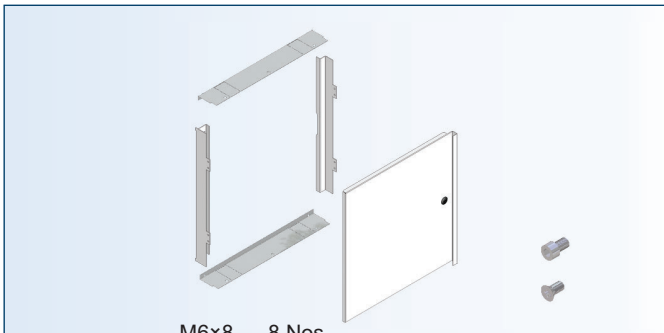

M6×8 - 8 Nos.

M6×10 - 6 Nos.

ESCUTCHEON DOOR

CAT. No.	DESCRIPTION	SIZE (W×H)	WEIGHT (kg)	ORDER No. RAL 9010 SMF	ORDER No. RAL 7035 FTF
*UESD 4.2	ESCUTCHEON DOOR	400 × 200	3.66	U15681	U15694
*UESD 4.4	ESCUTCHEON DOOR	400 × 400	4.88	U15682	U15695
*UESD 6.2	ESCUTCHEON DOOR	600 × 200	4.88	U15686	U15696
*UESD 6.3	ESCUTCHEON DOOR	600 × 300	5.49	U15687	U15697
*UESD 6.4	ESCUTCHEON DOOR	600 × 400	6.10	U15688	U15698
*UESD 6.6	ESCUTCHEON DOOR	600 × 600	7.40	U15689	U15699
*UESD 6.8	ESCUTCHEON DOOR	600 × 800	9.66	U15692	U15693
*UESD 6.10	ESCUTCHEON DOOR	600 × 1000	11.92	U15702	U15703
UESD 6.12	ESCUTCHEON DOOR	600 × 1200	14.18	U15711	U15713
UESD 6.14	ESCUTCHEON DOOR	600 × 1400	16.44	U15721	U15729
UESD 6.16	ESCUTCHEON DOOR	600 × 1600	18.08	U15723	U15730
UESD 6.18	ESCUTCHEON DOOR	600 × 1800	19.72	U15725	U15731
UESD 6.20	ESCUTCHEON DOOR	600 × 2000	21.36	U15727	U15728
UESD 8.6	ESCUTCHEON DOOR	800 × 600	9.24	U15741	U15742
UESD 8.8	ESCUTCHEON DOOR	800 × 800	12.01	U15751	U15752
UESD 8.10	ESCUTCHEON DOOR	800 × 1000	14.78	U15761	U15762
UESD 8.12	ESCUTCHEON DOOR	800 × 1200	17.55	U15772	U15773
UESD 8.14	ESCUTCHEON DOOR	800 × 1400	20.32	U15779	U15778
UESD 8.16	ESCUTCHEON DOOR	800 × 1600	22.16	U15783	U15776
UESD 8.18	ESCUTCHEON DOOR	800 × 1800	24.01	U15785	U15777
UESD 8.20	ESCUTCHEON DOOR	800 × 2000	25.85	U15787	U15788
UESD 10.18	ESCUTCHEON DOOR	1000 × 1800	25.85	U15795	U15796

* Escutcheon Doors can used with Steel Din Rail Insert

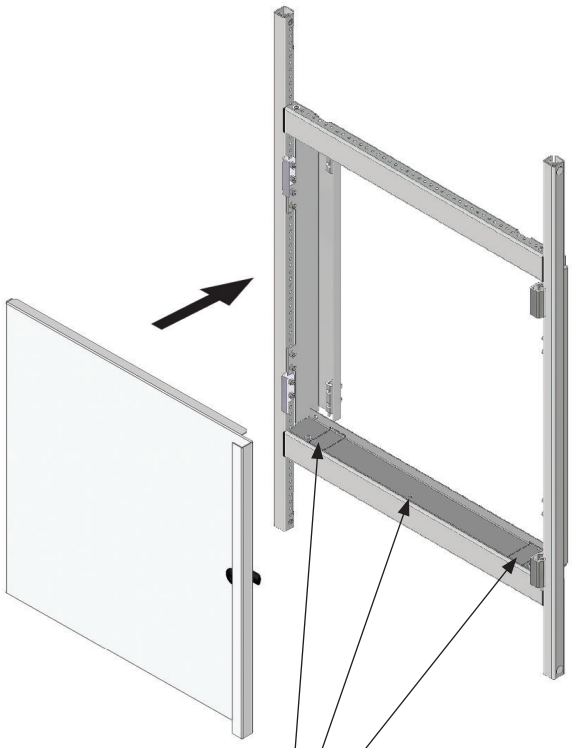

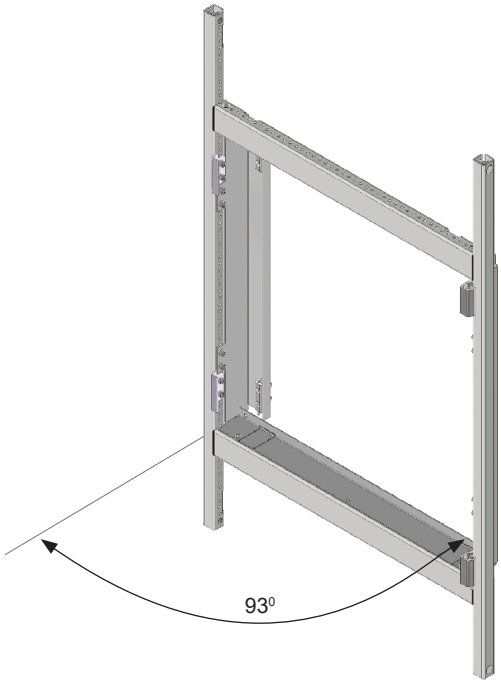

Remove in case of installation of Steel Din Rail Insert

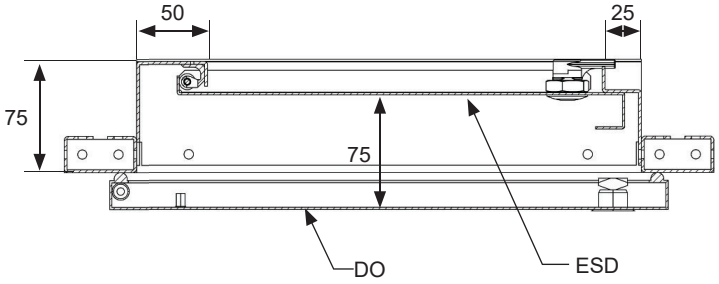

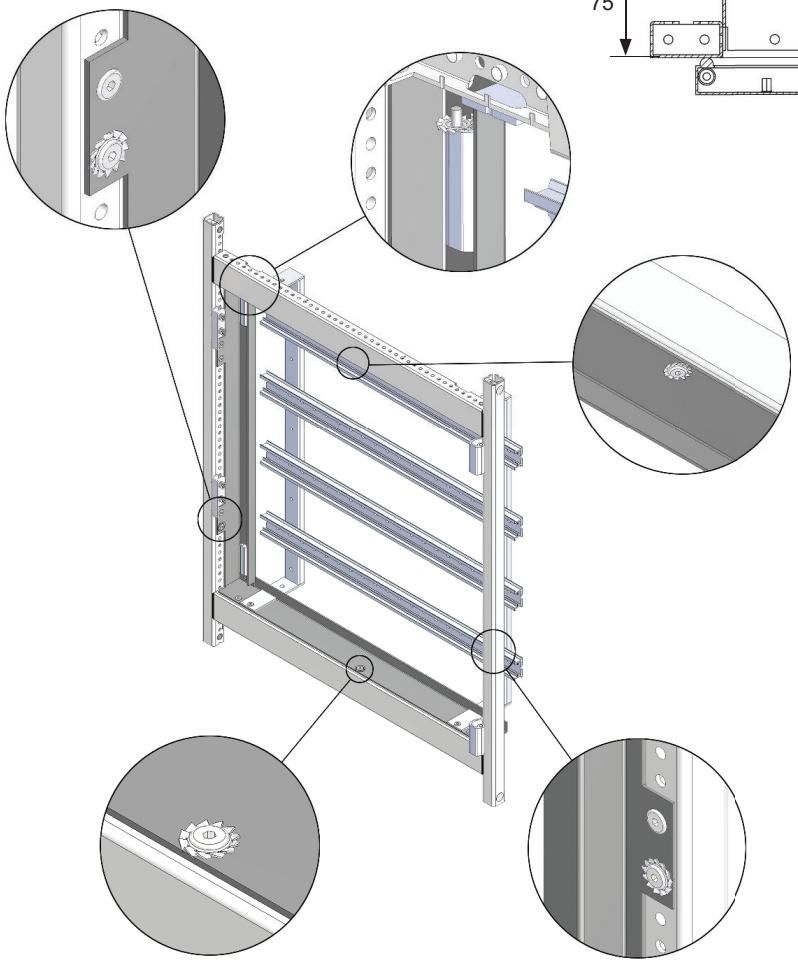

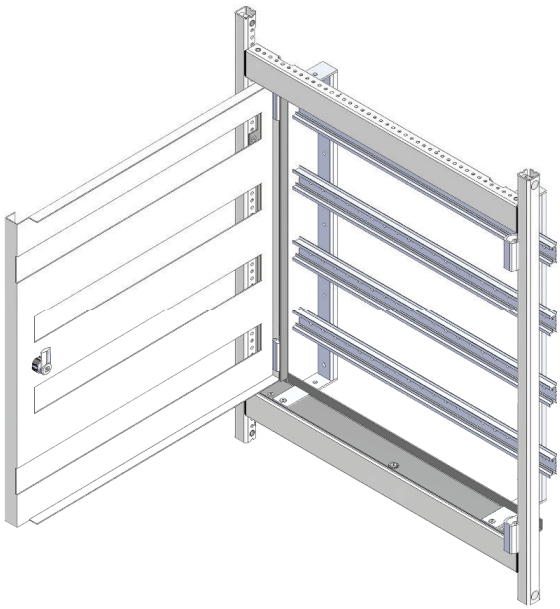

© 1997-2024 ELSTEEL. All Right Reserved

FIXED TYPE COMPARTMENT

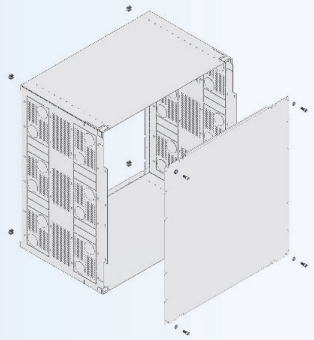

Arc tested

CAT. No.	DESCRIPTION	SIZE (W×H×D)	DEPTH (ACTUAL SIZE)	WEIGHT (kg)	ORDER No. RAL 9010 SMF
UFTC 4.2.2	FIXED TYPE COMPARTMENT	400×200×200	155	2.26	U32060
UFTC 4.3.2	FIXED TYPE COMPARTMENT	400×300×200	155	3.38	U32061
UFTC 4.4.2	FIXED TYPE COMPARTMENT	400×400×200	155	4.51	U32062
UFTC 4.5.2	FIXED TYPE COMPARTMENT	400×500×200	155	5.21	U32063
UFTC 4.6.2	FIXED TYPE COMPARTMENT	400×600×200	155	6.74	U32064
UFTC 4.2.3	FIXED TYPE COMPARTMENT	400×200×300	255	3.34	U32066
UFTC 4.3.3	FIXED TYPE COMPARTMENT	400×300×300	255	4.46	U32067
UFTC 4.4.3	FIXED TYPE COMPARTMENT	400×400×300	255	5.58	U32068
UFTC 4.5.3	FIXED TYPE COMPARTMENT	400×500×300	255	6.02	U32069
UFTC 4.6.3	FIXED TYPE COMPARTMENT	400×600×300	255	7.82	U32070
UFTC 4.2.4	FIXED TYPE COMPARTMENT	400×200×400	355	3.89	U32072
UFTC 4.3.4	FIXED TYPE COMPARTMENT	400×300×400	355	5.01	U32073
UFTC 4.4.4	FIXED TYPE COMPARTMENT	400×400×400	355	6.13	U32074
UFTC 4.5.4	FIXED TYPE COMPARTMENT	400×500×400	355	7.58	U32075
UFTC 4.6.4	FIXED TYPE COMPARTMENT	400×600×400	355	8.25	U32076
UFTC 6.2.2	FIXED TYPE COMPARTMENT	600×200×200	155	4.59	U32078
UFTC 6.3.2	FIXED TYPE COMPARTMENT	600×300×200	155	5.71	U32079
UFTC 6.4.2	FIXED TYPE COMPARTMENT	600×400×200	155	6.83	U32080
UFTC 6.5.2	FIXED TYPE COMPARTMENT	600×500×200	155	7.35	U32081
UFTC 6.6.2	FIXED TYPE COMPARTMENT	600×600×200	155	7.94	U32082
UFTC 6.2.3	FIXED TYPE COMPARTMENT	600×200×300	255	4.65	U32084
UFTC 6.3.3	FIXED TYPE COMPARTMENT	600×300×300	255	6.85	U32085
UFTC 6.4.3	FIXED TYPE COMPARTMENT	600×400×300	255	7.97	U32086
UFTC 6.5.3	FIXED TYPE COMPARTMENT	600×500×300	255	8.04	U32087
UFTC 6.6.3	FIXED TYPE COMPARTMENT	600×600×300	255	9.13	U32088
UFTC 6.2.4	FIXED TYPE COMPARTMENT	600×200×400	355	5.77	U32090
UFTC 6.3.4	FIXED TYPE COMPARTMENT	600×300×400	355	6.89	U32091
UFTC 6.4.4	FIXED TYPE COMPARTMENT	600×400×400	355	8.01	U32092
UFTC 6.5.4	FIXED TYPE COMPARTMENT	600×500×400	355	8.94	U32093
UFTC 6.6.4	FIXED TYPE COMPARTMENT	600×600×400	355	10.25	U32094

GLAND PLATES (FOR FTC)

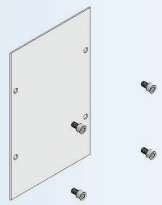

SGPF

PGPF

CAT. No.	DESCRIPTION	SIZE (W)	WEIGHT (kg)	ORDER No.
USGPF	STEEL GLAND PLATE	125×200	0.32	U31978
UPGPF	POLYCARBONATE GLAND PLATE	125×200	0.08	U31979

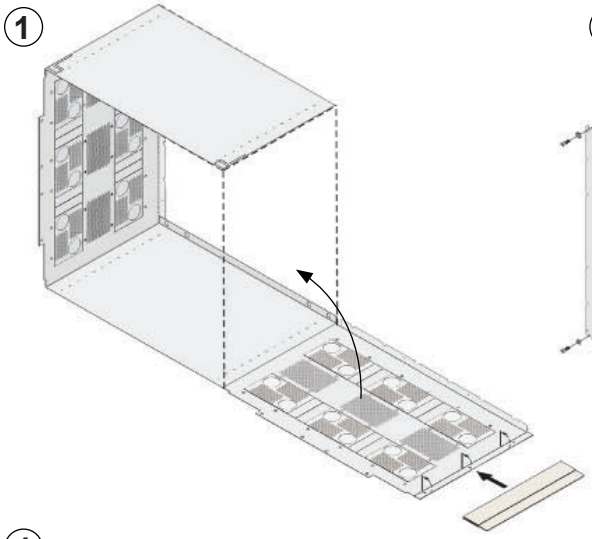

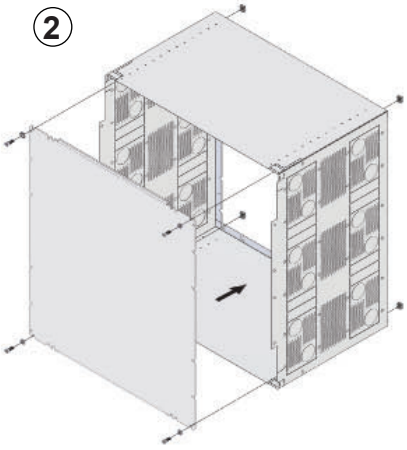

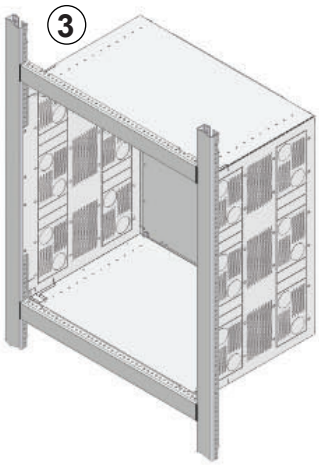

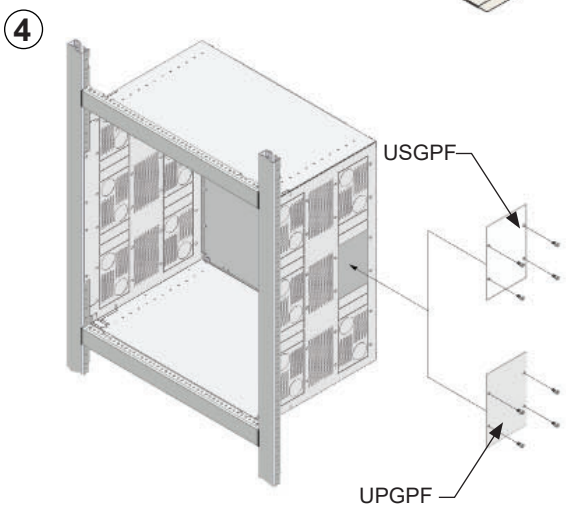

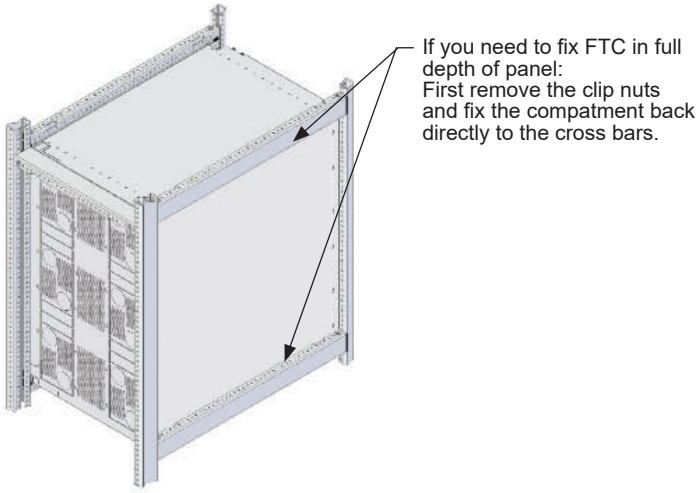

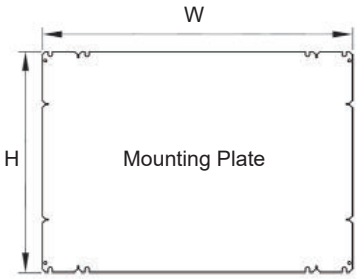

MP SIZE	W	H
400×200	327	181
400×300	327	281
400×400	327	381
400×500	327	481
400×600	327	581
600×200	527	181
600×300	527	281
600×400	527	381
600×500	527	481
600×600	527	581

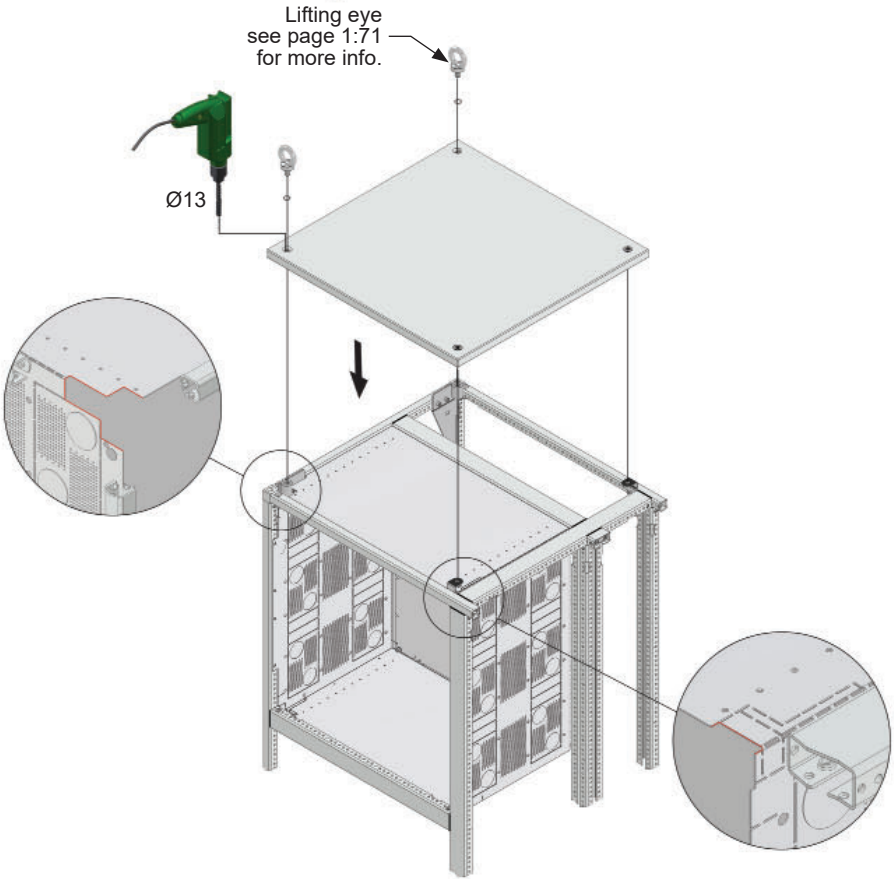

© 1997-2024 ELSTEEL. All Right Reserved

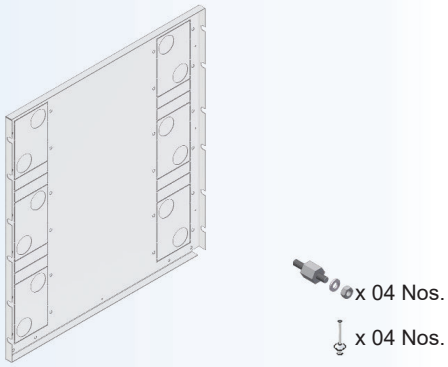

BACK PLATE (FOR UFTC)

CAT. No.	DESCRIPTION	SIZE (W×H)	WEIGHT (kg)	ORDER No.
UBAPL 4.2	BACK PLATE	400×200	0.78	U31980
UBAPL 4.3	BACK PLATE	400×300	1.05	U31981
UBAPL 4.4	BACK PLATE	400×400	1.34	U31982
UBAPL 4.5	BACK PLATE	400×500	1.71	U31983
UBAPL 4.6	BACK PLATE	400×600	1.92	U31984
UBAPL 6.2	BACK PLATE	600×200	1.17	U31986
UBAPL 6.3	BACK PLATE	600×300	1.56	U31987
UBAPL 6.4	BACK PLATE	600×400	1.73	U31988
UBAPL 6.5	BACK PLATE	600×500	1.98	U31989
UBAPL 6.6	BACK PLATE	600×600	2.29	U31990

COMPARTMENT RAILS

CAT. No.	DESCRIPTION	SIZE (W)	WEIGHT (kg)	ORDER No. RAL 9010 SMF
UCPR 4	COMPARTMENT RAILS	400	0.42	U31880
UCPR 6	COMPARTMENT RAILS	600	0.69	U31883

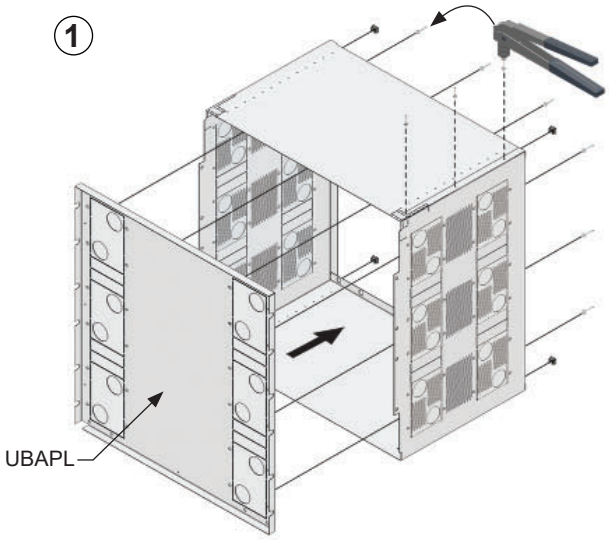

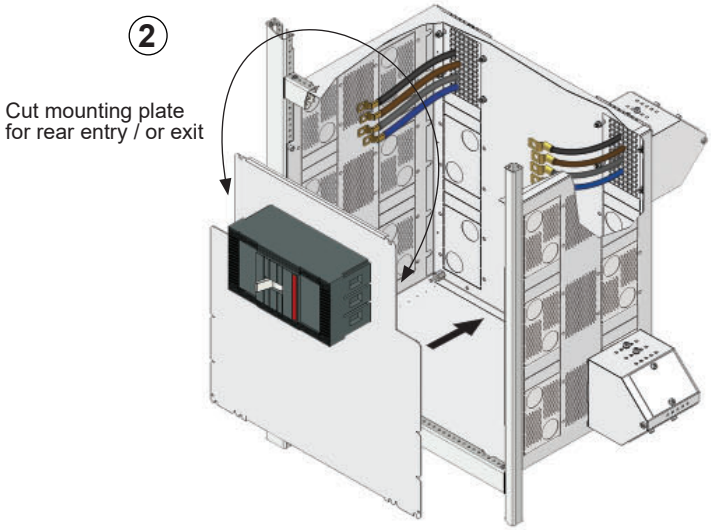

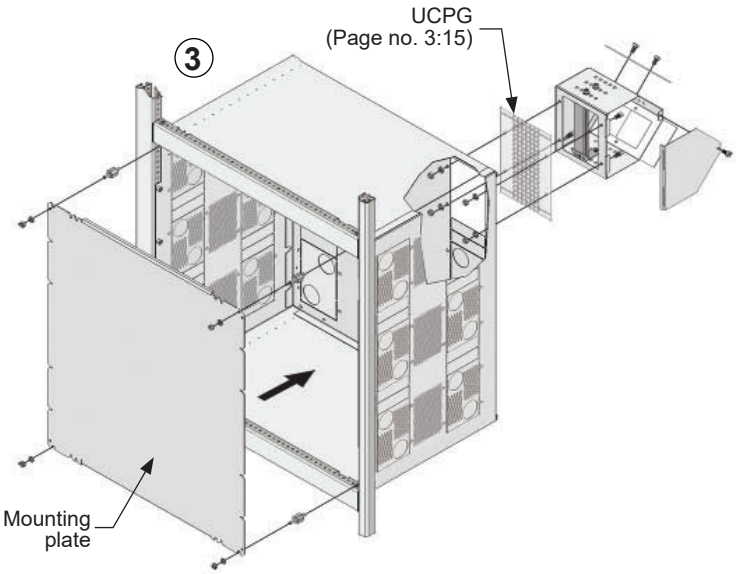

Maximum usable depth

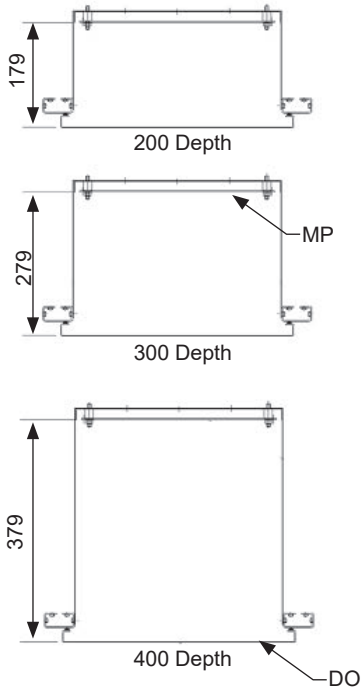

Adjustable Mounting Plate

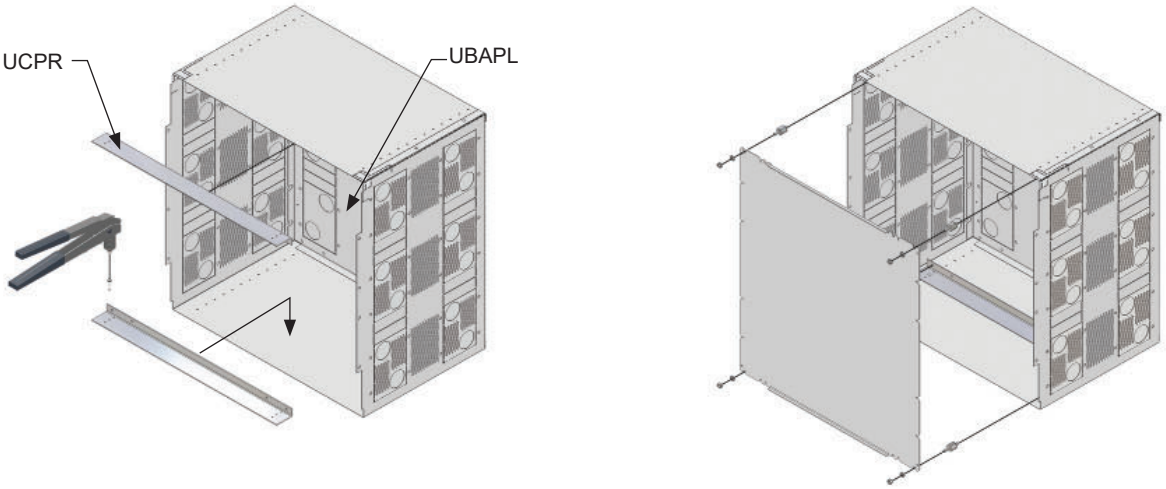

© 1997-2024 ELSTEEL. All Right Reserved

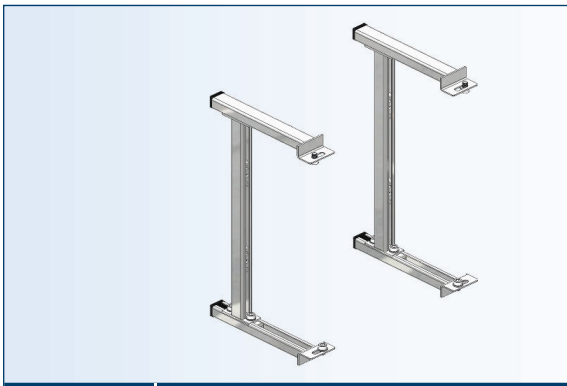

SUPERFLEX INSERT

CAT. No.	DESCRIPTION	SIZE (H×D)	WEIGHT (kg)	ORDER No.
USFI 2.2	SUPERFLEX INSERT	200 × 140	0.99	U30700
USFI 3.2	SUPERFLEX INSERT	300 × 140	1.13	U30705
USFI 4.2	SUPERFLEX INSERT	400 × 140	1.26	U30710
USFI 6.2	SUPERFLEX INSERT	600 × 140	1.55	U30715
USFI 8.2	SUPERFLEX INSERT	800 × 140	1.82	U30720
USFI 2.4	SUPERFLEX INSERT	200 × 340	1.55	U30750
USFI 3.4	SUPERFLEX INSERT	300 × 340	1.68	U30755
USFI 4.4	SUPERFLEX INSERT	400 × 340	1.81	U30760
USFI 6.4	SUPERFLEX INSERT	600 × 340	2.10	U30765
USFI 8.4	SUPERFLEX INSERT	800 × 340	2.37	U30770

Combine with DIN rail insert

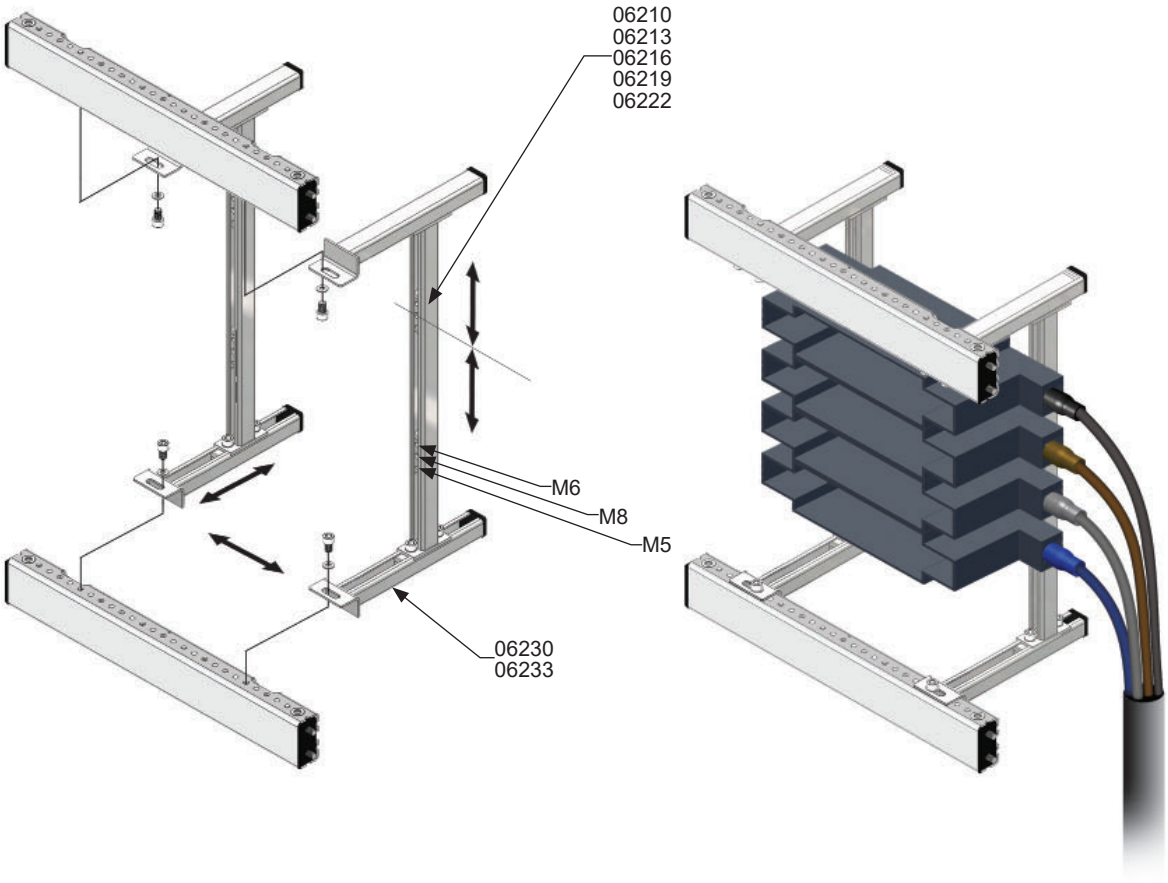

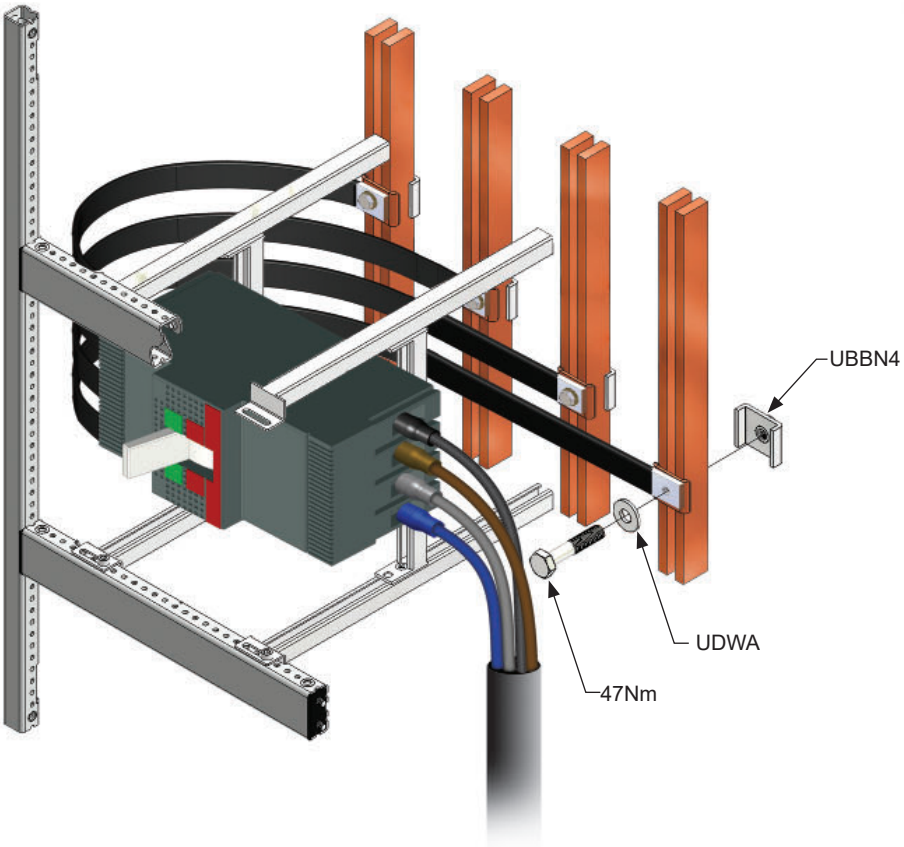

© 1997-2024 ELSTEEL. All Right Reserved

VERTICAL SEPARATION PLATE

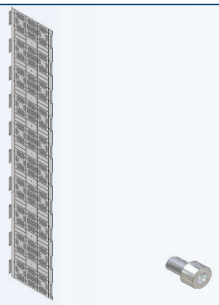

x 08 Nos.

CAT. No.	DESCRIPTION	SIZE (W×H)	WEIGHT (kg)	ORDER No. Alu zinc
UVSP 2.8	VERTICAL SEPARATION PLATE	200 × 800	1.35	U34405
UVSP 2.10	VERTICAL SEPARATION PLATE	200 × 1000	1.69	U34406
UVSP 2.12	VERTICAL SEPARATION PLATE	200 × 1200	2.03	U34407
UVSP 2.14	VERTICAL SEPARATION PLATE	200 × 1400	2.37	U34408
UVSP 2.16	VERTICAL SEPARATION PLATE	200 × 1600	2.71	U34409
UVSP 2.18	VERTICAL SEPARATION PLATE	200 × 1800	2.90	U34410
UVSP 2.20	VERTICAL SEPARATION PLATE	200 × 2000	3.22	U34411
UVSP 2.22	VERTICAL SEPARATION PLATE	200 × 2200	3.53	U34413
UVSP 3.8	VERTICAL SEPARATION PLATE	300 × 800	2.03	U34515
UVSP 3.10	VERTICAL SEPARATION PLATE	300 × 1000	2.54	U34516
UVSP 3.12	VERTICAL SEPARATION PLATE	300 × 1200	3.05	U34517
UVSP 3.14	VERTICAL SEPARATION PLATE	300 × 1400	3.56	U34518
UVSP 3.16	VERTICAL SEPARATION PLATE	300 × 1600	4.07	U34519
UVSP 3.18	VERTICAL SEPARATION PLATE	300 × 1800	4.35	U34520
UVSP 3.20	VERTICAL SEPARATION PLATE	300 × 2000	4.83	U34521
UVSP 3.22	VERTICAL SEPARATION PLATE	300 × 2200	5.30	U34523
UVSP 4.8	VERTICAL SEPARATION PLATE	400 × 800	2.55	U34395
UVSP 4.10	VERTICAL SEPARATION PLATE	400 × 1000	3.33	U34396
UVSP 4.12	VERTICAL SEPARATION PLATE	400 × 1200	4.11	U34397
UVSP 4.14	VERTICAL SEPARATION PLATE	400 × 1400	4.89	U34398
UVSP 4.16	VERTICAL SEPARATION PLATE	400 × 1600	5.46	U34399
UVSP 4.18	VERTICAL SEPARATION PLATE	400 × 1800	5.82	U34400
UVSP 4.20	VERTICAL SEPARATION PLATE	400 × 2000	6.89	U34401
UVSP 4.22	VERTICAL SEPARATION PLATE	400 × 2200	7.63	U34403

CABLE GLAND

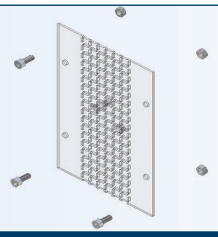

Polycarbonate

x 08 Nos.

CAT. No.	DESCRIPTION	SIZE (W×H)	WEIGHT (kg)	ORDER No.
UCG VP	CABLE GLAND	110 × 200	0.007	U34501

HORIZONTAL SEPARATION PLATE

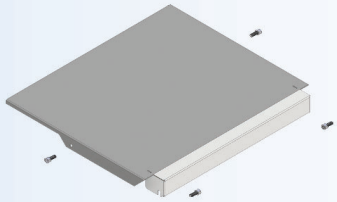

CAT. No.	DESCRIPTION	SIZE (W×D)	WEIGHT (kg)	VERSION 3 ORDER No. RAL 7035 FTF.
UHSP 4.2	HORIZONTAL SEPARATION PLATE	400 × 200	0.96	U34704
UHSP 4.3	HORIZONTAL SEPARATION PLATE	400 × 300	1.44	U34714
UHSP 4.4	HORIZONTAL SEPARATION PLATE	400 × 400	1.81	U34724
UHSP 6.2	HORIZONTAL SEPARATION PLATE	600 × 200	1.44	U34764
UHSP 6.3	HORIZONTAL SEPARATION PLATE	600 × 300	2.16	U34774
UHSP 6.4	HORIZONTAL SEPARATION PLATE	600 × 400	2.69	U34784

Version 3

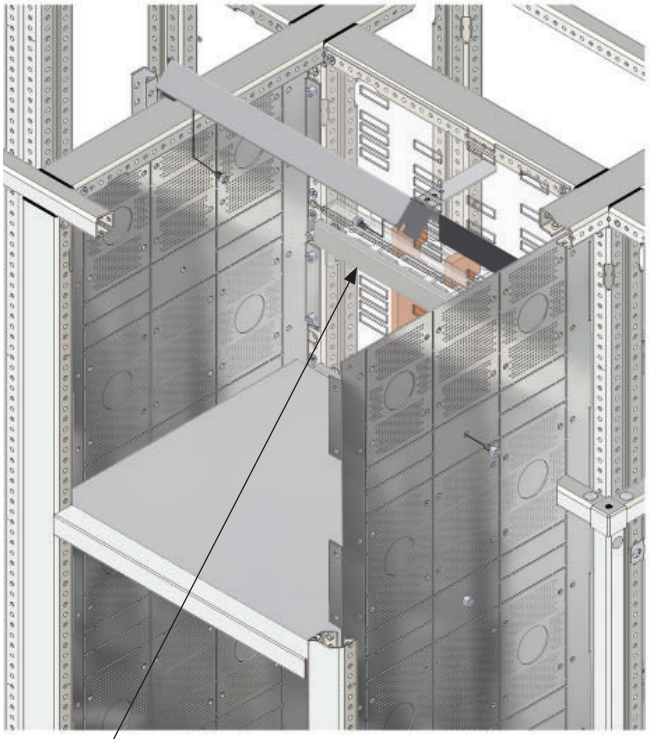

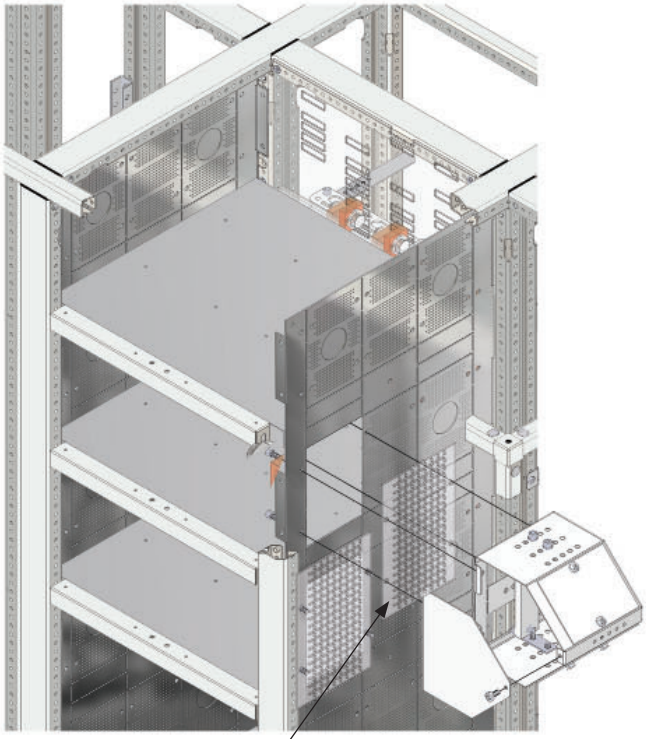

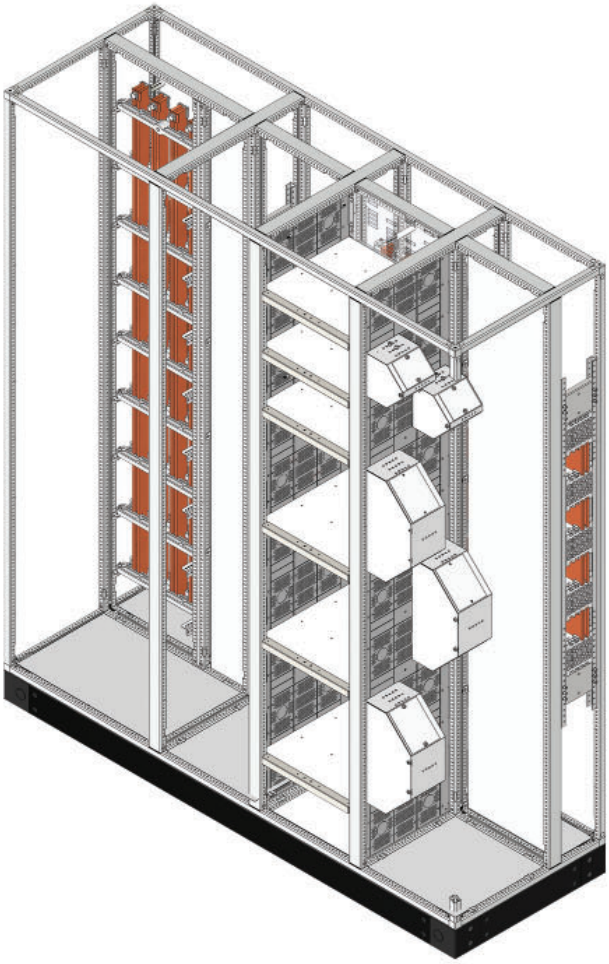

© 1997-2024 ELSTEEL. All Right Reserved

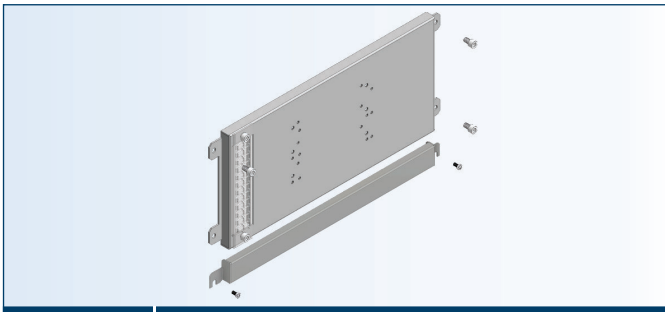

FIXED TYPE MOUNTING PLATE

CAT. No.	DESCRIPTION	SIZE (W×H)	WEIGHT (kg)	ORDER No. Alu-zinc
UFTM 4.2	FIXED TYPE MOUNTING PLATE	400 × 200	1.21	U34200
UFTM 4.3	FIXED TYPE MOUNTING PLATE	400 × 300	1.98	U34205
UFTM 4.4	FIXED TYPE MOUNTING PLATE	400 × 400	2.27	U34210
UFTM 4.6	FIXED TYPE MOUNTING PLATE	400 × 600	3.42	U34220
UFTM 6.2	FIXED TYPE MOUNTING PLATE	600 × 200	1.87	U34350
UFTM 6.3	FIXED TYPE MOUNTING PLATE	600 × 300	2.43	U34355
UFTM 6.4	FIXED TYPE MOUNTING PLATE	600 × 400	3.53	U34360
UFTM 6.6	FIXED TYPE MOUNTING PLATE	600 × 600	5.28	U34370

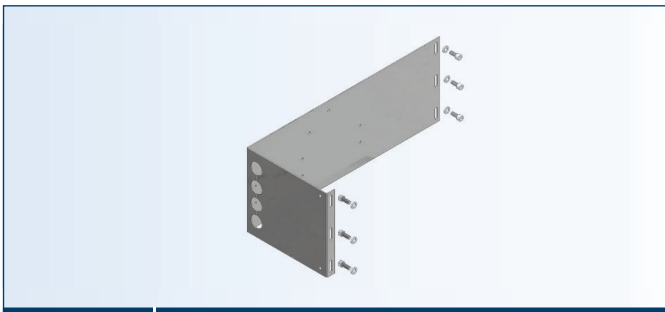

GROUP MOUNTING PLATE

CAT. No.	DESCRIPTION	SIZE (W×H×D)	WEIGHT (kg)	ORDER No. Alu-zinc
UGMP 4.75	GROUP MOUNTING PLATE	400 × 75 × 250	0.78	U34335
UGMP 4.80	GROUP MOUNTING PLATE	400 × 80 × 250	0.83	U34336
UGMP 4.105	GROUP MOUNTING PLATE	400 × 105 × 250	1.09	U34337
UGMP 4.140	GROUP MOUNTING PLATE	400 × 140 × 250	1.46	U34338
UGMP 4.185	GROUP MOUNTING PLATE	400 × 185 × 250	1.93	U34339
UGMP 6.150	GROUP MOUNTING PLATE	600 × 150 × 250	2.04	U34340
UGMP 6.200	GROUP MOUNTING PLATE	600 × 200 × 250	2.72	U34341
UGMP 6.225	GROUP MOUNTING PLATE	600 × 225 × 250	3.06	U34342

UFTM

400 WIDE

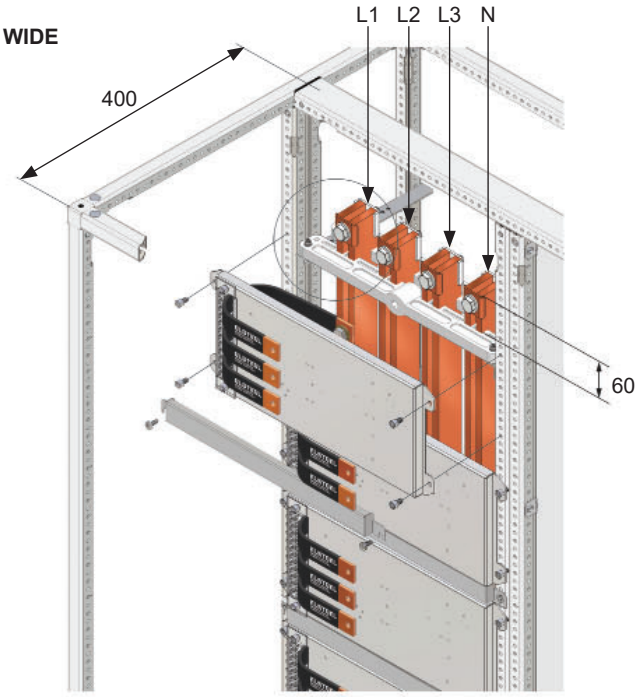

600 WIDE

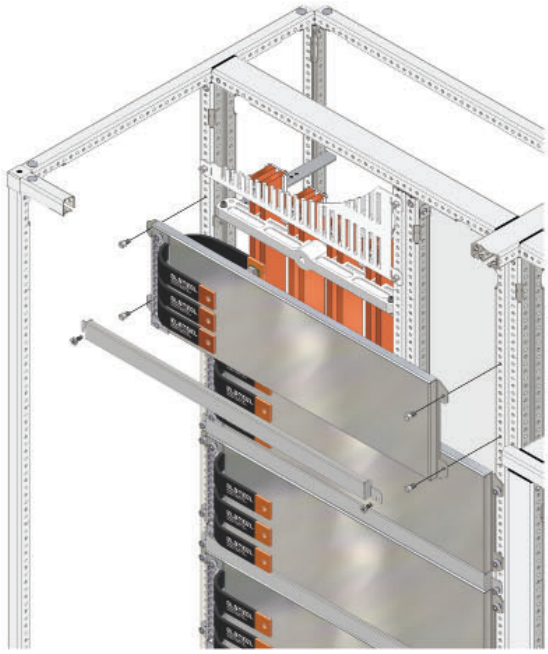

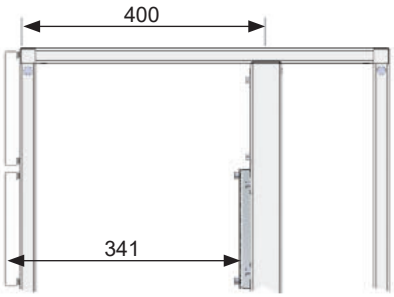

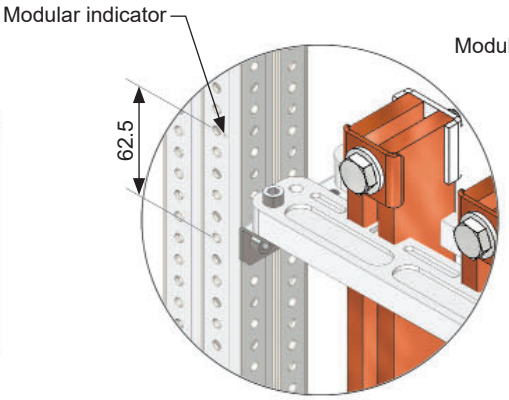

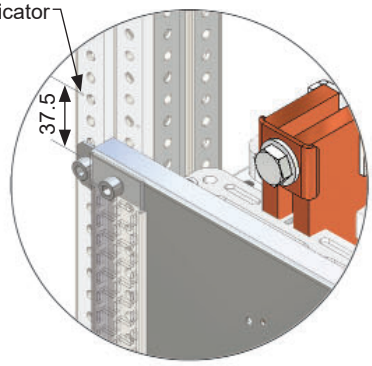

UGMP

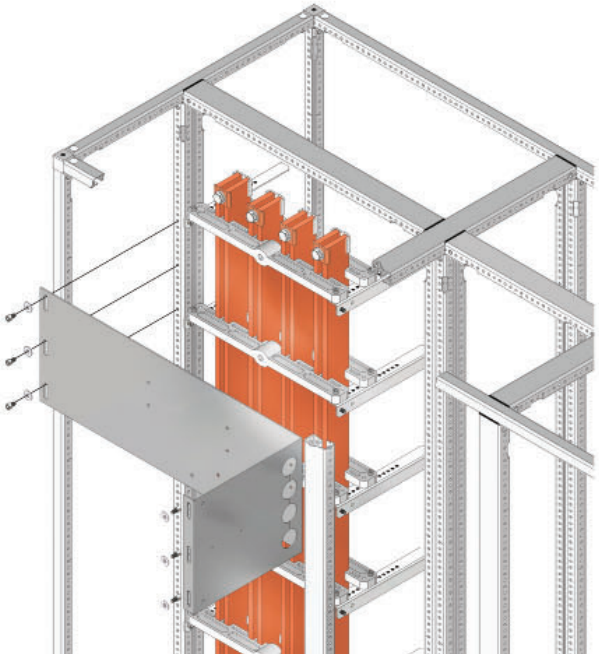

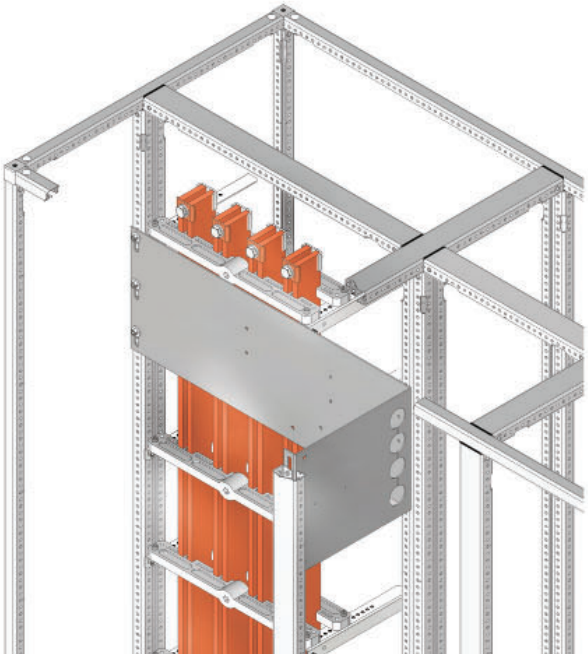

© 1997-2024 ELSTEEL. All Right Reserved

GLAND PLATES
(FOR VERTICAL SEPARATION PLATE)

34550

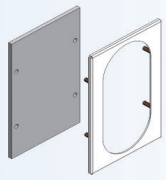

Quick gland

34565

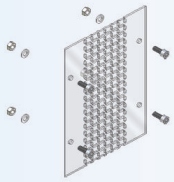

Polycarbonate

CAT. No.	DESCRIPTION	SIZE	WEIGHT (kg)	ORDER No.
UCQG	QUICK GLAND	125 × 200	0.17	U34550
UCPG	POLYCARBONATE GLAND PLATE	125 × 200	0.08	U34565

Cabling

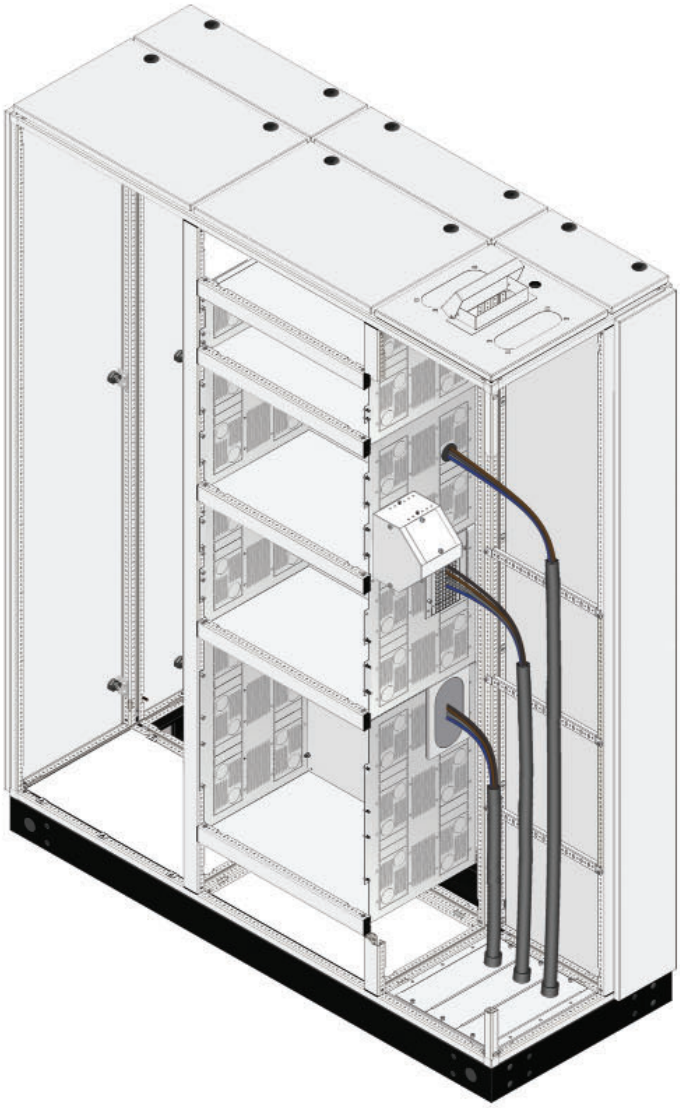

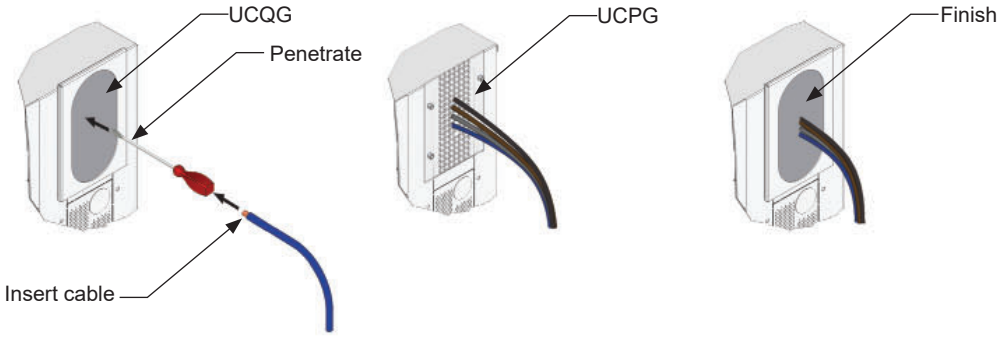

© 1997-2024 ELSTEEL. All Right Reserved

CHASSIS PROFILES

CAT. No.	DESCRIPTION	MODULAR SIZE	WEIGHT (kg)	ORDER No. Alu zinc RAL 9010 SMF.	ORDER No. Alu zinc RAL 7035 FTF.
UCPDB 2	CHASSIS PROFILES	200	0.3	U65250	U65274
UCPDB 4	CHASSIS PROFILES	400	1.1	U65260	U65191
UCPDB 6	CHASSIS PROFILES	600	2.3	U65261	U65192
UCPDB 8	CHASSIS PROFILES	800	2.5	U65262	U65193
UCPDB 10	CHASSIS PROFILES	1000	2.8	U65263	U65194
UCPDB 12	CHASSIS PROFILES	1200	3.1	U65264	U65195
UCPDB 14	CHASSIS PROFILES	1400	3.3	U65270	U65196
UCPDB 16	CHASSIS PROFILES	1600	4.2	U65271	U65197
UCPDB 18	CHASSIS PROFILES	1800	4.6	U65272	U65198
UCPDB 20	CHASSIS PROFILES	2000	5.1	U65273	U65199

FLAT TOP & BOTTOM PROFILES

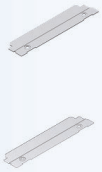

CAT. No.	DESCRIPTION	MODULAR SIZE (W)	WEIGHT (kg)	ORDER No. RAL RAL 9010 SMF.	ORDER No. RAL 7035 FTF..
UTBPDB 3	FLAT TOP & BOTTOM PROFILES	300	0.21	U65265	U65285
UTBPDB 4	FLAT TOP & BOTTOM PROFILES	400	0.30	U65266	U65286
UTBPDB 5	FLAT TOP & BOTTOM PROFILES	500	0.40	U65267	U65287
UTBPDB 6	FLAT TOP & BOTTOM PROFILES	600	0.51	U65268	U65288
UTBPDB 8	FLAT TOP & BOTTOM PROFILES	800	0.68	U65269	U65289

25mm FILLING PROFILES

CAT. No.	DESCRIPTION	MODULAR SIZE (W)	WEIGHT (kg)	ORDER No. RAL 9010 SMF.	ORDER No. RAL 7035 FTF.
UFLPDB 3	25mm FILLING PROFILES	300	0.22	U65291	U65475
UFLPDB 4	25mm FILLING PROFILES	400	0.30	U65292	U65476
UFLPDB 5	25mm FILLING PROFILES	500	0.37	U65293	U65477
UFLPDB 6	25mm FILLING PROFILES	600	0.45	U65294	U65478
UFLPDB 8	25mm FILLING PROFILES	800	0.37	U65295	U65479

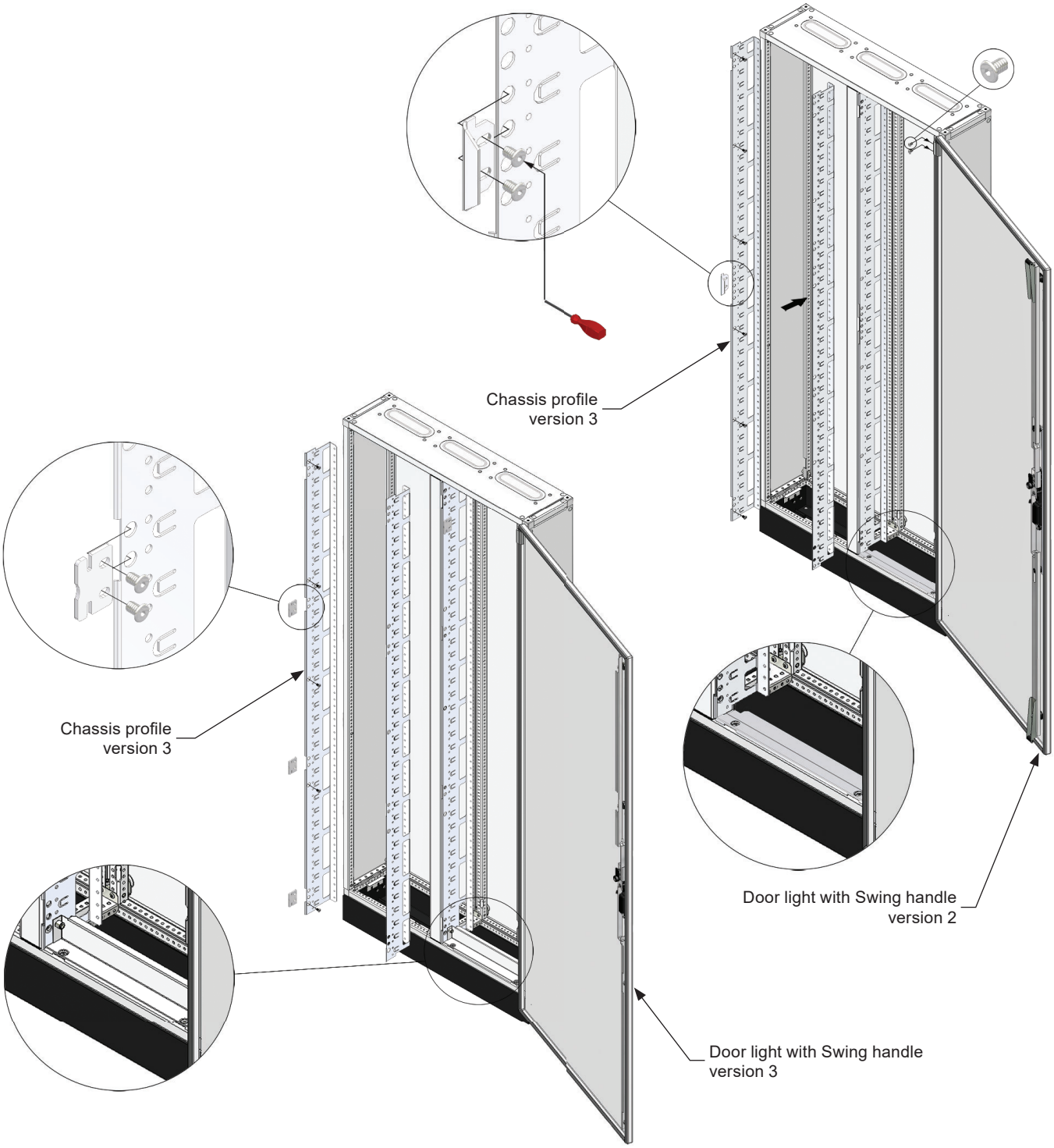

DIN INSERTS								
PANEL HEIGHT	300×150 ROWS+UNITS	400×150 ROWS+UNITS	500×150 ROWS+UNITS	600×150 ROWS+UNITS	300×200 ROWS+UNITS	400×200 ROWS+UNITS	500×200 ROWS+UNITS	600×200 ROWS+UNITS
200	1 × 12	1 × 18	1 × 23	1 × 29	-	-	-	-
400	2 × 24	2 × 36	2 × 46	2 × 58	1 × 12	1 × 18	1 × 23	1 × 29
600	3 × 39	3 × 57	3 × 72	3 × 90	2 × 24	2 × 36	2 × 46	2 × 58
800	5 × 60	5 × 90	5 × 115	5 × 145	3 × 36	3 × 54	3 × 69	3 × 87
1000	6 × 72	6 × 108	6 × 138	6 × 174	4 × 48	4 × 72	4 × 92	4 × 116
1200	7 × 84	7 × 126	7 × 161	7 × 203	5 × 60	5 × 90	5 × 115	5 × 145
1400	9 × 108	9 × 162	9 × 207	9 × 261	6 × 72	6 × 108	6 × 138	6 × 174
1600	10 × 120	10 × 180	10 × 230	10 × 290	7 × 84	7 × 126	7 × 161	7 × 203
1800	11 × 132	11 × 198	11 × 253	11 × 319	8 × 96	8 × 144	8 × 184	8 × 232
2000	13 × 156	13 × 234	13 × 299	13 × 377	9 × 108	9 × 162	9 × 207	9 × 261

© 1997-2024 ELSTEEL. All Right Reserved

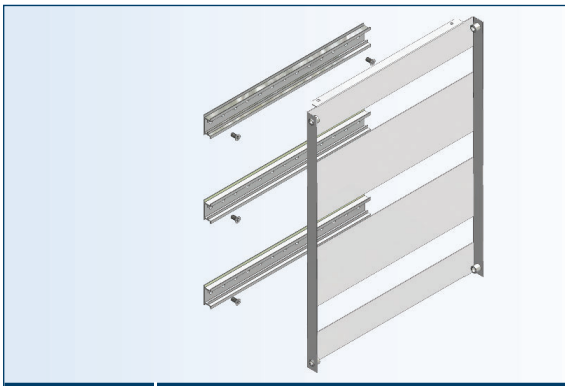

STEEL DIN RAIL INSERT
(FOR CHASSIS PROFILE)

CAT. No.	DESCRIPTION	ROWS ×UNITS	SIZE (W×H)	WEIGHT (kg)	ORDER No. RAL 9010 SMF.
UDIDB 3.15	STEEL DIN RAIL INSERT	1 × 12	300 × 150	0.40	U65305
UDIDB 3.20	STEEL DIN RAIL INSERT	1 × 12	300 × 200	0.52	U65315
UDIDB 3.30	STEEL DIN RAIL INSERT	2 × 12	300 × 300	0.78	U65375
UDIDB 3.45	STEEL DIN RAIL INSERT	3 × 12	300 × 450	1.20	U65450
UDIDB 4.15	STEEL DIN RAIL INSERT	1 × 18	400 × 150	0.51	U65300
UDIDB 4.20	STEEL DIN RAIL INSERT	1 × 18	400 × 200	0.75	U65310
UDIDB 4.30	STEEL DIN RAIL INSERT	2 × 18	400 × 300	1.04	U65380
UDIDB 4.45	STEEL DIN RAIL INSERT	3 × 18	400 × 450	1.53	U65455
UDIDB 5.15	STEEL DIN RAIL INSERT	1 × 23	500 × 150	0.67	U65325
UDIDB 5.20	STEEL DIN RAIL INSERT	1 × 23	500 × 200	0.86	U65335
UDIDB 5.30	STEEL DIN RAIL INSERT	2 × 23	500 × 300	1.30	U65385
UDIDB 5.45	STEEL DIN RAIL INSERT	3 × 23	500 × 450	2.01	U65460
UDIDB 6.15	STEEL DIN RAIL INSERT	1 × 29	600 × 150	0.83	U65320
UDIDB 6.20	STEEL DIN RAIL INSERT	1 × 29	600 × 200	1.04	U65330
UDIDB 6.30	STEEL DIN RAIL INSERT	2 × 29	600 × 300	1.56	U65390
UDIDB 6.45	STEEL DIN RAIL INSERT	3 × 29	600 × 450	2.49	U65465

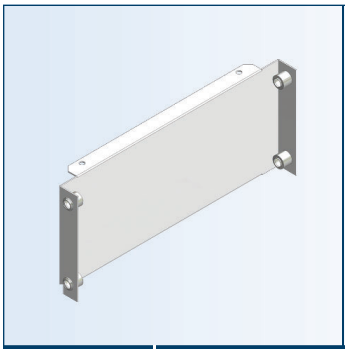

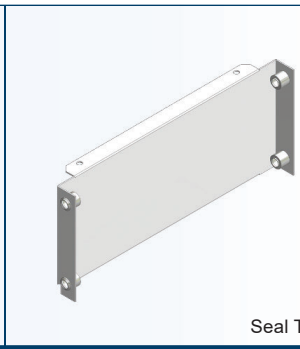

Seal Type

STEEL BLANK FRONT PLATE
(FOR CHASSIS PROFILE)

CAT. No.	DESCRIPTION	SIZE (W×H)	WEIGHT (kg)	ORDER No. RAL 9010 SMF.	ORDER No. SEAL TYPE RAL 9010 SMF.
UBFDB 3.5	STEEL BLANK FRONT PLATE	300 × 50	0.13	U65543	-
UBFDB 3.10	STEEL BLANK FRONT PLATE	300 × 100	0.26	U65544	-
UBFDB 3.15	STEEL BLANK FRONT PLATE	300 × 150	0.39	U65545	U65554
UBFDB 3.20	STEEL BLANK FRONT PLATE	300 × 200	0.52	U65546	U65548
UBFDB 3.30	STEEL BLANK FRONT PLATE	300 × 300	0.83	U65550	U65552
UBFDB 3.45	STEEL BLANK FRONT PLATE	300 × 450	1.17	U65555	U65557
UBFDB 3.60	STEEL BLANK FRONT PLATE	300 × 600	1.56	U65560	U65562
UBFDB 4.5	STEEL BLANK FRONT PLATE	400 × 50	0.19	U65498	-
UBFDB 4.10	STEEL BLANK FRONT PLATE	400 × 100	0.37	U65499	-
UBFDB 4.15	STEEL BLANK FRONT PLATE	400 × 150	0.56	U65500	U65502
UBFDB 4.20	STEEL BLANK FRONT PLATE	400 × 200	0.69	U65501	U65503
UBFDB 4.30	STEEL BLANK FRONT PLATE	400 × 300	1.02	U65505	U65507
UBFDB 4.45	STEEL BLANK FRONT PLATE	400 × 450	1.53	U65510	U65512
UBFDB 4.60	STEEL BLANK FRONT PLATE	400 × 600	2.05	U65515	U65517
UBFDB 5.5	STEEL BLANK FRONT PLATE	500 × 50	0.23	U65563	-
UBFDB 5.10	STEEL BLANK FRONT PLATE	500 × 100	0.46	U65564	-
UBFDB 5.15	STEEL BLANK FRONT PLATE	500 × 150	0.69	U65565	-
UBFDB 5.20	STEEL BLANK FRONT PLATE	500 × 200	0.86	U65566	-
UBFDB 5.30	STEEL BLANK FRONT PLATE	500 × 300	1.28	U65570	-
UBFDB 5.45	STEEL BLANK FRONT PLATE	500 × 450	2.08	U65575	-
UBFDB 5.60	STEEL BLANK FRONT PLATE	500 × 600	2.78	U65580	-
UBFDB 6.5	STEEL BLANK FRONT PLATE	600 × 50	0.25	U65518	-
UBFDB 6.10	STEEL BLANK FRONT PLATE	600 × 100	0.51	U65519	-
UBFDB 6.15	STEEL BLANK FRONT PLATE	600 × 150	0.76	U65520	-
UBFDB 6.20	STEEL BLANK FRONT PLATE	600 × 200	1.03	U65521	-
UBFDB 6.30	STEEL BLANK FRONT PLATE	600 × 300	1.56	U65525	-
UBFDB 6.45	STEEL BLANK FRONT PLATE	600 × 450	2.29	U65530	-
UBFDB 6.60	STEEL BLANK FRONT PLATE	600 × 600	3.06	U65535	-

Tip!
Mounting and wiring can be done on the work table

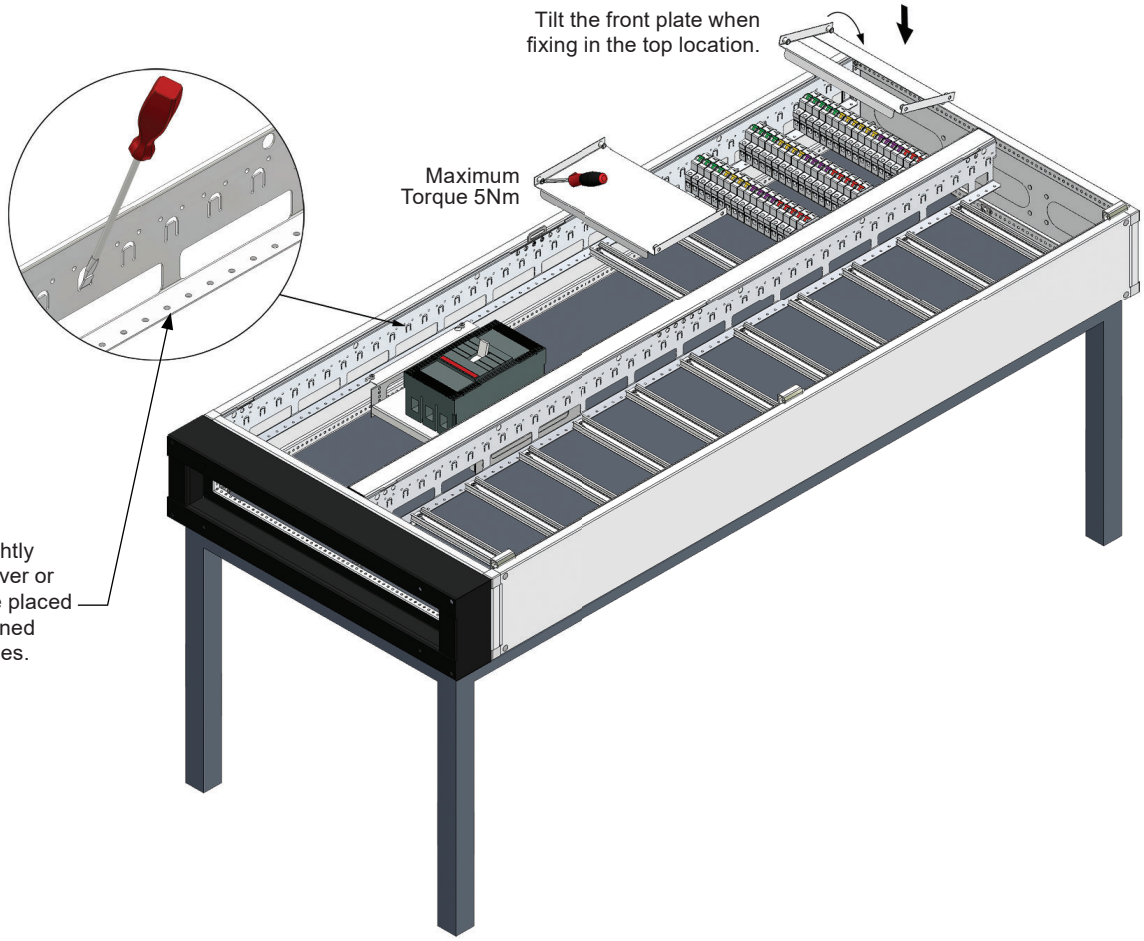

© 1997-2024 ELSTEEL. All Right Reserved

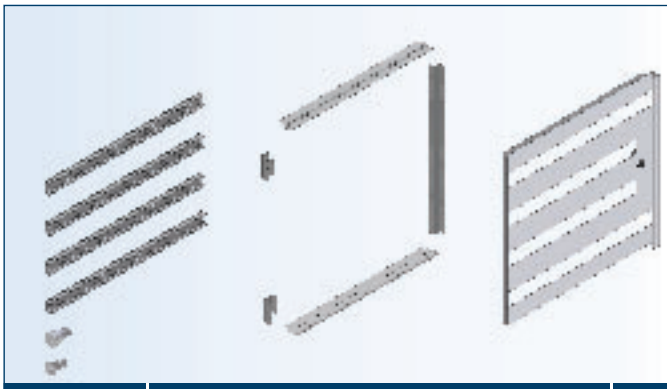

STEEL DIN RAIL INSERT WITH ESCUTCHEON DOOR (FOR CHASSIS PROFILE)

CAT. No.	DESCRIPTION	ROWS+UNITS	SIZE (W×H)	WEIGHT (kg)	ORDER No. RAL 9010 SMF	ORDER No. RAL 7035 FTF
USDRCP 4.2	STEEL DIN RAIL INSERT WITH ESCUTCHEON DOOR	1 × 18	400 × 200	1.85	U30600	U30601
USDRCP 4.4	STEEL DIN RAIL INSERT WITH ESCUTCHEON DOOR	2 × 18	400 × 400	3.30	U30602	U30603
USDRCP 4.6	STEEL DIN RAIL INSERT WITH ESCUTCHEON DOOR	4 × 18	400 × 600	4.88	U30604	U30605
USDRCP 4.8	STEEL DIN RAIL INSERT WITH ESCUTCHEON DOOR	6 × 18	400 × 800	5.45	U30606	U30607
USDRCP 4.10	STEEL DIN RAIL INSERT WITH ESCUTCHEON DOOR	7 × 18	400 × 1000	7.35	U30608	U30609
USDRCP 6.2	STEEL DIN RAIL INSERT WITH ESCUTCHEON DOOR	1 × 29	600 × 200	2.60	U30620	U30621
USDRCP 6.4	STEEL DIN RAIL INSERT WITH ESCUTCHEON DOOR	2 × 29	600 × 400	4.58	U30622	U30623
USDRCP 6.6	STEEL DIN RAIL INSERT WITH ESCUTCHEON DOOR	4 × 29	600 × 600	6.81	U30624	U30625
USDRCP 6.8	STEEL DIN RAIL INSERT WITH ESCUTCHEON DOOR	6 × 29	600 × 800	9.72	U30626	U30627
USDRCP 6.10	STEEL DIN RAIL INSERT WITH ESCUTCHEON DOOR	7 × 29	600 × 1000	10.87	U30628	U30629

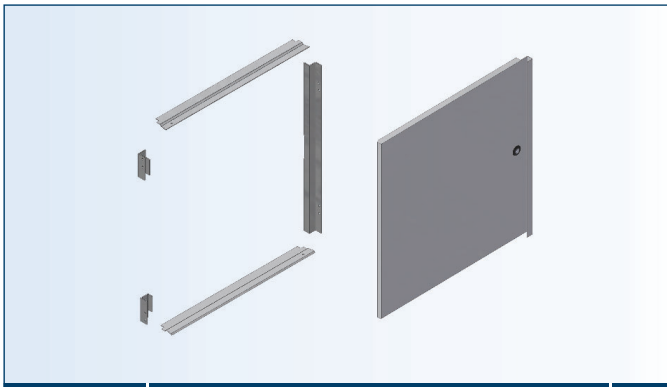

ESCUTCHEON DOOR (FOR CHASSIS PROFILE)

CAT. No.	DESCRIPTION	ROWS+UNITS	SIZE (W×H)	WEIGHT (kg)	ORDER No. RAL 9010 SMF	ORDER No. RAL 7035 FTF
UESDCP 4.2	ESCUTCHEON DOOR	1 × 18	400 × 200	1.87	U16410	U16411
UESDCP 4.4	ESCUTCHEON DOOR	2 × 18	400 × 400	3.24	U16412	U16413
UESDCP 4.6	ESCUTCHEON DOOR	4 × 18	400 × 600	4.60	U16414	U16415
UESDCP 4.8	ESCUTCHEON DOOR	6 × 18	400 × 800	5.97	U16416	U16417
UESDCP 4.10	ESCUTCHEON DOOR	7 × 18	400 × 1000	7.43	U16418	U16419
UESDCP 6.2	ESCUTCHEON DOOR	1 × 29	600 × 200	2.55	U16430	U16431
UESDCP 6.4	ESCUTCHEON DOOR	2 × 29	600 × 400	4.39	U16432	U16433
UESDCP 6.6	ESCUTCHEON DOOR	4 × 29	600 × 600	6.23	U16434	U16435
UESDCP 6.8	ESCUTCHEON DOOR	6 × 29	600 × 800	8.55	U16436	U16437
UESDCP 6.10	ESCUTCHEON DOOR	7 × 29	600 × 1000	9.90	U16438	U16439

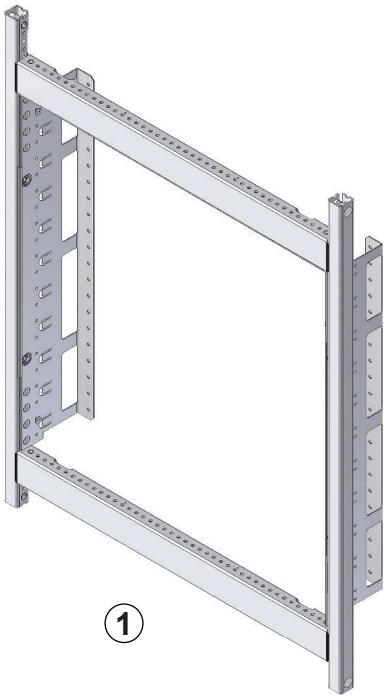

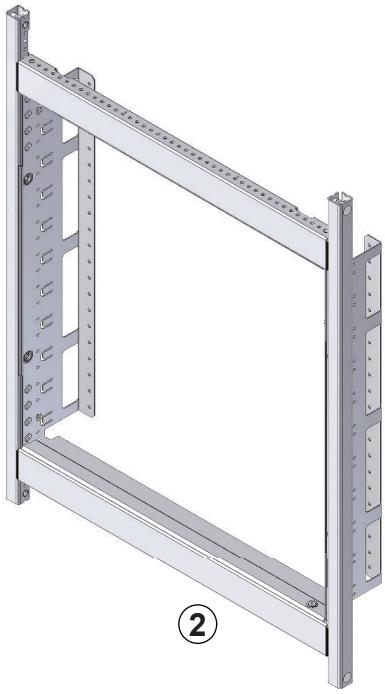

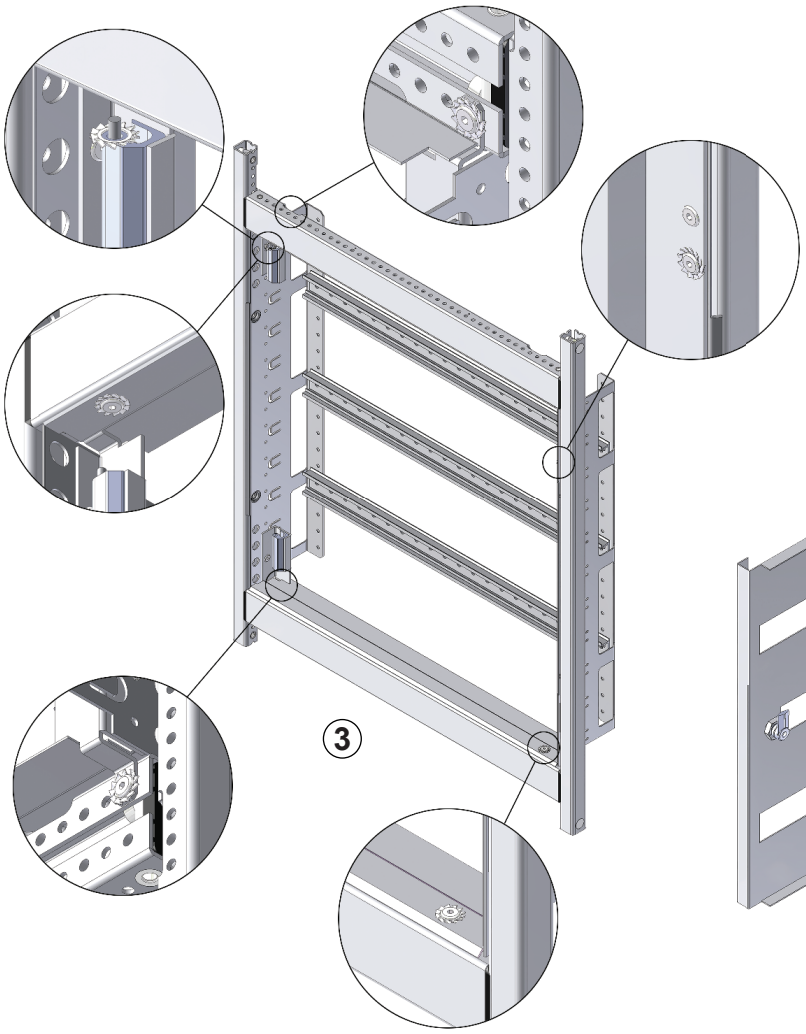

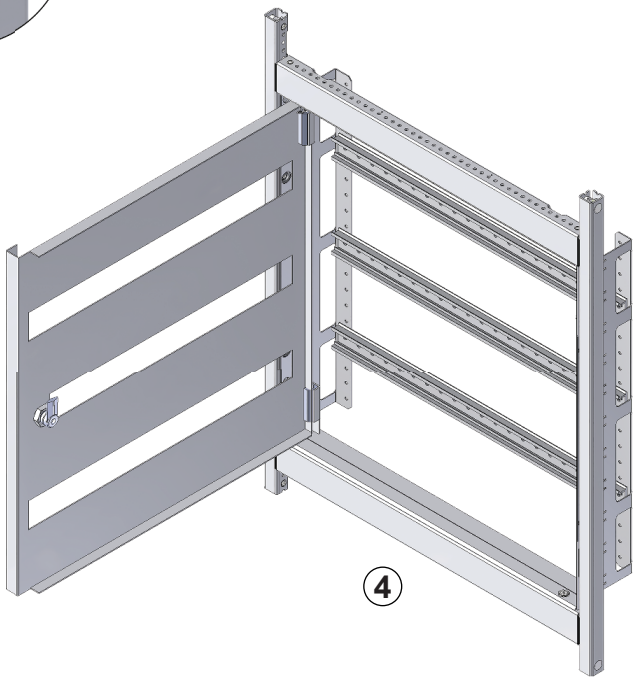

© 1997-2024 ELSTEEL. All Right Reserved

DIN RAIL

CAT. No.	DESCRIPTION	LENGTH	WEIGHT (kg)	ORDER No. Aluminium
UALDR 2	DIN RAIL	2000	0.764	U65350
UALDR 4	DIN RAIL	4000	1.530	U65351

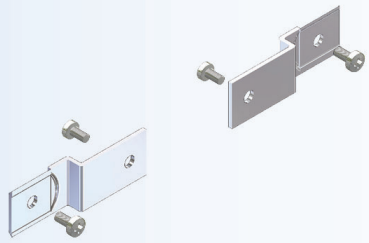

BRACKETS FOR DIN RAIL

CAT. No.	DESCRIPTION	WEIGHT (kg)	ORDER No. Zinc plated
UBDR	BRACKETS FOR DIN RAIL	0.06	U65591

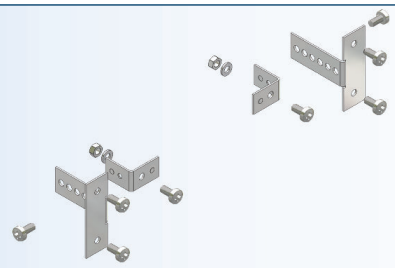

ADJUSTABLE BRACKETS FOR DIN RAIL

CAT. No.	DESCRIPTION	WEIGHT (kg)	ORDER No. Zinc plated
UABDR	ADJUSTABLE BRACKETS FOR DIN RAIL	0.14	U65592

DIN RAIL WITH BRACKETS

CAT. No.	DESCRIPTION	WEIGHT (kg)	ORDER No.
UDBDR 6	DIN RAIL WITH BRACKETS	0.22	U65594
UDBDR 8	DIN RAIL WITH BRACKETS	0.35	U65597

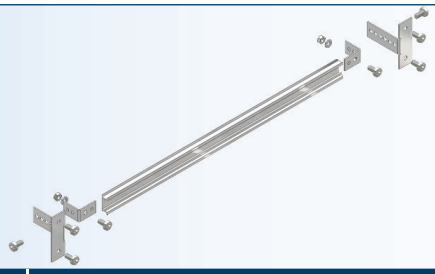

DIN RAIL WITH ADJUSTABLE BRACKETS

CAT. No.	DESCRIPTION	WEIGHT (kg)	ORDER No.
UDABDR 6	DIN RAIL WITH ADJUSTABLE BRACKETS	0.31	U65595
UDABDR 8	DIN RAIL WITH ADJUSTABLE BRACKETS	0.53	U65598

Instruction for depth adjustable DIN Rail

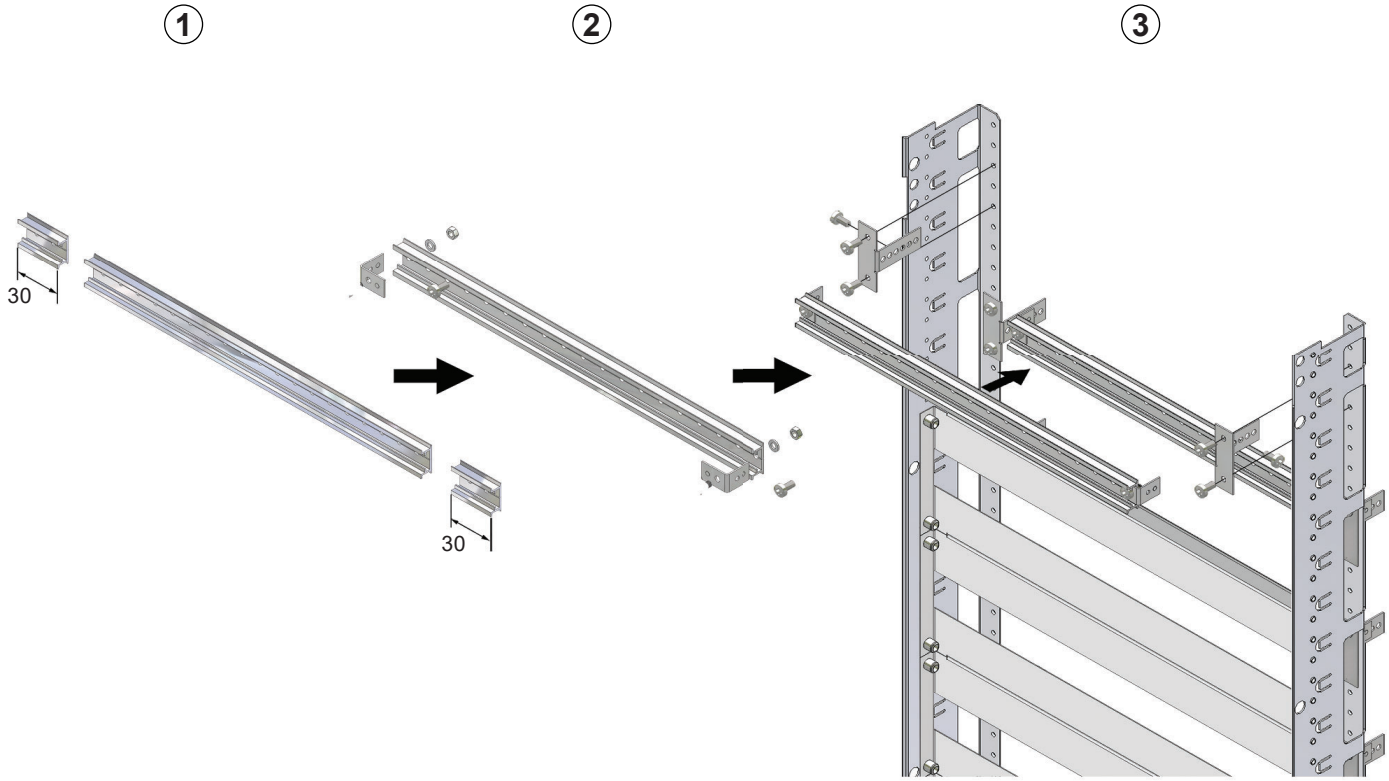

© 1997-2024 ELSTEEL. All Right Reserved

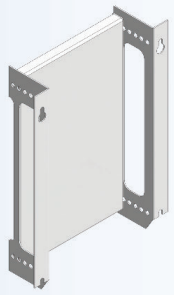

ADJUSTABLE MOUNTING PLATE

CAT. No.	DESCRIPTION	SIZE (W×H)	MOUNTING PLATE SIZE (W×H)	WEIGHT (kg)	ORDER No. Alu zinc
UAMDB 3.15	ADJUSTABLE MOUNTING PLATE	300×150	185×150	0.62	U65430
UAMDB 3.20	ADJUSTABLE MOUNTING PLATE	300×200	185×200	0.82	U65431
UAMDB 3.30	ADJUSTABLE MOUNTING PLATE	300×300	185×300	1.12	U65432
UAMDB 3.45	ADJUSTABLE MOUNTING PLATE	300×450	185×450	1.68	U65434
UAMDB 4.15	ADJUSTABLE MOUNTING PLATE	400×150	285×150	0.75	U65400
UAMDB 4.20	ADJUSTABLE MOUNTING PLATE	400×200	285×200	1.09	U65401
UAMDB 4.30	ADJUSTABLE MOUNTING PLATE	400×300	285×300	1.50	U65405
UAMDB 4.45	ADJUSTABLE MOUNTING PLATE	400×450	285×450	2.25	U65410
UAMDB 5.15	ADJUSTABLE MOUNTING PLATE	500×150	385×150	0.92	U65436
UAMDB 5.20	ADJUSTABLE MOUNTING PLATE	500×200	385×200	1.36	U65437
UAMDB 5.30	ADJUSTABLE MOUNTING PLATE	500×300	385×300	1.85	U65438
UAMDB 5.45	ADJUSTABLE MOUNTING PLATE	500×450	385×450	2.78	U65440
UAMDB 6.15	ADJUSTABLE MOUNTING PLATE	600×150	485×150	1.25	U65415
UAMDB 6.20	ADJUSTABLE MOUNTING PLATE	600×200	485×200	1.63	U65416
UAMDB 6.30	ADJUSTABLE MOUNTING PLATE	600×300	485×300	2.23	U65420
UAMDB 6.45	ADJUSTABLE MOUNTING PLATE	600×450	485×450	3.21	U65425

FIXED TYPE MOUNTING PLATE

CAT. No.	DESCRIPTION	SIZE (W×H)	WEIGHT (kg)	ORDER No. Alu zinc
UFMDB 3.15	FIXED TYPE MOUNTING PLATE	300×150	0.40	U65600
UFMDB 3.20	FIXED TYPE MOUNTING PLATE	300×200	0.53	U65601
UFMDB 3.30	FIXED TYPE MOUNTING PLATE	300×300	0.81	U65602
UFMDB 3.45	FIXED TYPE MOUNTING PLATE	300×450	1.22	U65604
UFMDB 3.60	FIXED TYPE MOUNTING PLATE	300×600	1.63	U65606
UFMDB 4.15	FIXED TYPE MOUNTING PLATE	400×150	0.62	U65608
UFMDB 4.20	FIXED TYPE MOUNTING PLATE	400×200	0.82	U65609
UFMDB 4.30	FIXED TYPE MOUNTING PLATE	400×300	1.25	U65610
UFMDB 4.45	FIXED TYPE MOUNTING PLATE	400×450	1.71	U65612
UFMDB 4.60	FIXED TYPE MOUNTING PLATE	400×600	2.50	U65614
UFMDB 5.15	FIXED TYPE MOUNTING PLATE	500×150	0.78	U65616
UFMDB 5.20	FIXED TYPE MOUNTING PLATE	500×200	1.04	U65617
UFMDB 5.30	FIXED TYPE MOUNTING PLATE	500×300	1.56	U65618
UFMDB 5.45	FIXED TYPE MOUNTING PLATE	500×450	2.34	U65620
UFMDB 5.60	FIXED TYPE MOUNTING PLATE	500×600	3.12	U65622
UFMDB 6.15	FIXED TYPE MOUNTING PLATE	600×150	0.98	U65624
UFMDB 6.20	FIXED TYPE MOUNTING PLATE	600×200	1.30	U65625
UFMDB 6.30	FIXED TYPE MOUNTING PLATE	600×300	1.96	U65626
UFMDB 6.45	FIXED TYPE MOUNTING PLATE	600×450	2.94	U65628
UFMDB 6.60	FIXED TYPE MOUNTING PLATE	600×600	3.93	U65630

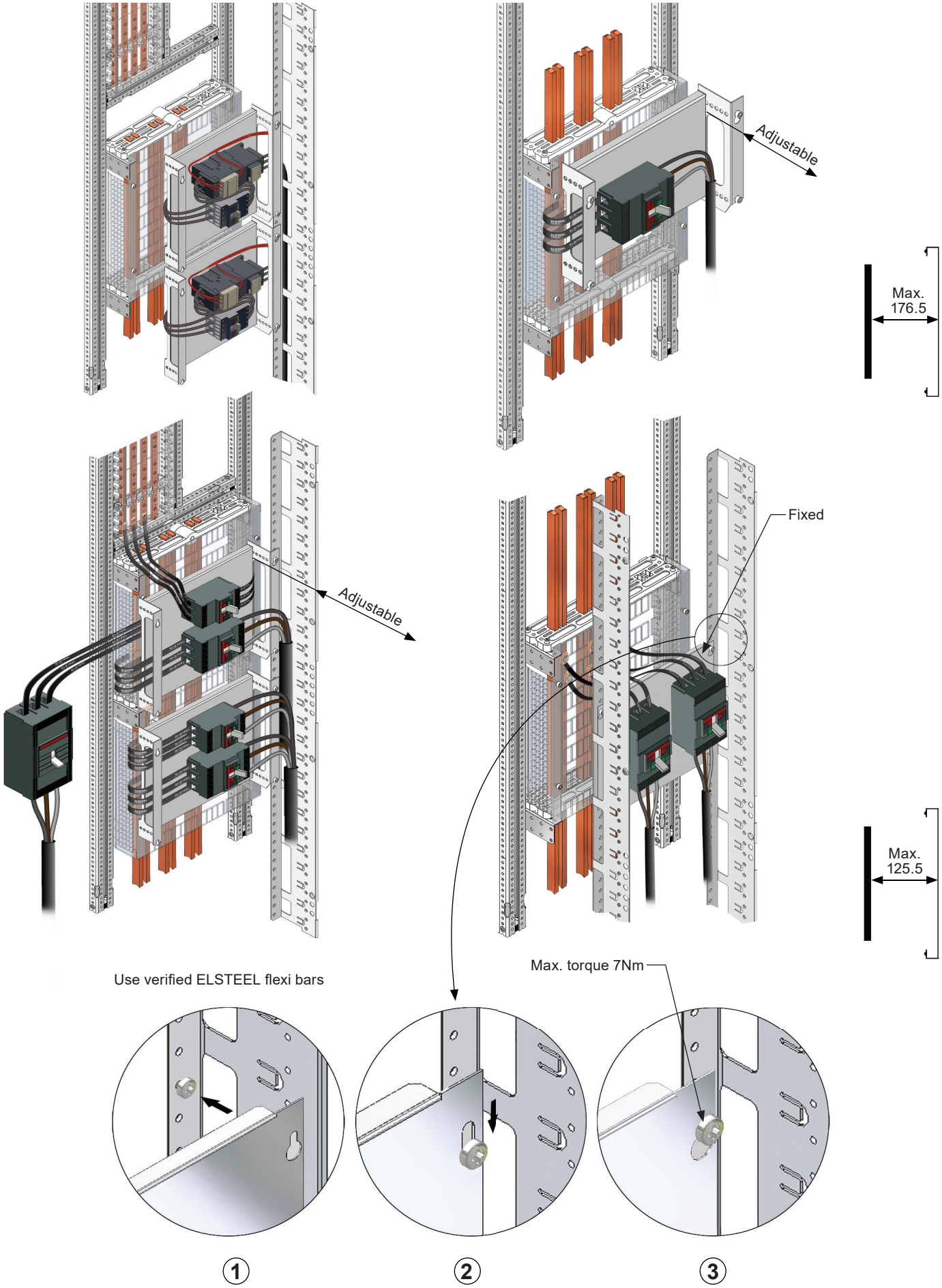

© 1997-2024 ELSTEEL. All Right Reserved

Techno Module - Technical Data

GENERAL DATA

Mounting possibilities	Floor standing / Wall mounting
Standard colour	RAL7035 Fine texture (Inquire for non standard colours)
Coating	Epoxy/ Polyester powder, Thickness ≥ 60µm

MECHANICAL DATA

Field / Tier Arrangement	Front connected / Back to back/ L-shape
Cable entry	Top / Centre / Bottom
Compartment types	Fixed
Access	Front / Rear
NEMA type	1, 2 and 12
Maximum dimensions of a transport section (Basic module 200×200×200)	Width - 2200 Height - 2400 (can be extended) Depth - 2200

STANDARD FOR SAFETY

E207550	UL508A, Industrial Control Panels
E207550	CAN/CSA C22.2 No.14-13, Industrial Control Equipment
E468107	UL891, Switchboards
E468107	UL845, Motor Control Centers

CONDITIONS OF ACCEPTABILITY

For use only in complete equipment, where the acceptability of the combination is determined by Underwriters Laboratories Inc.

- The acceptability of electrical spacing requirements of the assembled panel will be evaluated in the end use during the assembly of the Panel as per UL508A.
- The suitability of supply connections shall be evaluated in the end product.
- Suitability of bonding means and grounding shall be determined in the end product.
- Installation and wiring instructions shall be evaluated in the end product investigation.
- The suitability of Panel Light Enclosure shall be evaluated in the end product investigation.
- The suitability of electrical spacings, internal wiring, and component mounting shall be determined in the end product.
- Enclosure may or may not have openings. In the final application at the applicant's facility, all openings must be closed including conduit openings and push button openings.
- Busbar holders shall be part of complete Listed Motor Control Center Sections and Units or Industrial Control panels.
- The through-air spacings provided by busbar holders should be judged under the requirements covering the end-use product.
- Stand-off insulators (UINS) have been evaluated and found to comply with the tensile strength and cantilever testing in UL 891, Annex G.
- The Suitability of the Recognized Component plastic material with regards to temperature rating and electrical characteristics and other characteristics, should be determined in the end-use application.

DRAINAGE OPENINGS

Enclosures rated Type 2 shall have provisions for drainage. Drainage openings shall not be less than 3.2 mm in diameter (1/8 inch in diameter) or more than 6.4 mm in diameter (1/4 inch in diameter), unless baffled or provided with a drainage fitting. Alternatively the enclosure shall have instructions indicating the method of (obtaining) providing drainage openings when the enclosure is being used for Types applications.

Guidance for Enclosure Types

Enclosure Type 12

The following items can be used for Enclosure Type 12

CAT. No.	DESCRIPTION	PAGE
UBFC	PLINTH CORNERS	1:01
UBPP	PLINTH PROFILES	1:01
UBCB	CLAMPING BRACKETS	1:01
UPFSB	PLINTH FRAME SUPPORTING BRACKETS	1:03
UHPFSB	HEAVY DUTY PLINTH FRAME SUPPORTING BRACKETS	1:05
UHPC	HEAVY DUTY PLINTH CORNERS	1:07
UHPP	HEAVY DUTY PLINTH PROFILES	1:07
UHPPW	HEAVY DUTY PLINTH WIDTH PROFILES	1:05
UHPPD	HEAVY DUTY PLINTH DEPTH PROFILES	1:05
UHCB	HEAVY DUTY CLAMPING ANGLES	1:07
UCRS	CORNERS	1:09
UCB	CORNER BARS	1:11
UCBS	CROSS BAR	1:13
UEC	EXTENDED CORNERS	1:15
UCBC	EXTENDED CROSS BAR CORNER	1:15
UFSP	FRAME SUPPORTERS	1:15
UDO	DOOR	1:17
UGBFD	GUIDE BRACKET FOR DOOR	1:17
UPKT	POCKET	1:21
USQI	LOCK INSERT	1:23
UKL	KNOB LOCK	1:23
UKELS	KEY LOCK	1:23
UTHLC	T-HANDLE LOCK	1:23
UDWSH	DOOR WITH SWING HANDLE	1:25
UDOB	LOCK INSERT FOR SWING HANDLE	1:25
UTHL	T-HANDLE LOCK CLOSING SYSTEM	1:27
USWHN	SWING HANDLE CLOSING SYSTEM	1:29
USSFD	SWITCH FOR DOOR	1:31
UTMCOV	TM LOCK COVER	1:31
UDOST	DOOR STAY	1:33
UCOV	COVER	1:35
UMP	MOUNTING PLATE	1:45
UFIP	FILLER PROFILE	1:45
UMR	MOUNTING RAILS	1:45
UMB	MOUNTING BRACKETS	1:45
USFMP	SPACER FOR MOUNTING PLATE	1:45
UHDSU	HEAVY DUTY SUPPORT	1:47
UMPSLD	MOUNTING PLATE SLIDERS	1:47
UACM	ACB MOUNTING PLATE	1:49
UASC	ACB SUPPORT CHANNEL	1:49
USP	SEPARATION PLATE	1:51
UPSPC	SEPARATION PLATES WITH VENTILATION	1:55
UMCE	MODULAR CABLE ENTRY PLATE	1:57
UCGF	CABLE GLAND FRAME	1:59
UCGFS	CABLE GLAND FRAME FOR MOUNTING PLATE SLIDERS	1:59
UBLP	CABLE GLAND PLATE	1:61
UKOP	KNOCK OUT PLATE	1:61
UQGP	QUICK GLAND PLATE	1:61
UAGP	ALUMINIUM GLAND PLATE	1:61
UGP55	GLAND PLATE	1:61
UGPSL	GLAND PLATE WITH SLIDER	1:61
UIGP	INTERNAL GLAND PLATE	1:63
UCH	CABLE HOLDER	1:65
UDCH	DOOR CABLE HOLDER	1:65
UAF216	ARC FILTER	1:69

© 1997-2024 ELSTEEL. All Right Reserved

Enclosure Type 12 continued

CAT. No.	DESCRIPTION	PAGE
UAFSP	ARC FILTER SEPARATION PLATE	1:69
UAFBPL	ARC FAULT BARRIER PLATE	1:69
ULE	LIFTING EYES	1:71
UFSMP	FIXING STUDS FOR MOUNTING PLATE V2	1:71
UTMWMB	TM WALL MOUNTING BRACKETS	1:73
UBRS	PANEL ASSEMBLY KIT	1:75
ULSK	L SHAPE CORNER KIT	1:77
UUBH	BUSBAR HOLDER	2:01
UCBOL	CENTER BOLT	2:07
UFHP	FISH PLATE KIT	2:13
UCS	COPPER SPACER	2:15
HVC	HORIZONTAL TO VERTICAL CONNECTOR	2:15
UDWA	BUSBAR TAP OFF ACCESSORIES	2:19
UBEC	EARTH BRACKET	2:21
UEBC	HEAVY DUTY EARTH BAR CLAMP	2:21
UINS	INSULATOR	2:21
UDINI	STEEL DIN RAIL INSERT	3:01
UBLFP	STEEL BLANK FRONT PLATE	3:01
UESD	ESCUTCHEON DOOR	3:03
UFTC	FIXED TYPE COMPARTMENT	3:05
UCPR	COMPARTMENT RAILS	3:07
USGPF	GLAND PLATE FOR FTC	3:05
UBAPL	BACK PLATE FOR FTC	3:07
USFI	SUPERFLEX INSERT	3:09
UCPDB	CHASSIS PROFILE	3:17
UTBPDB	FLAT TOP AND BOTTOM PROFILE	3:17
UFLPDB	25MM FILLING PROFILES	3:17
UDIDB	STEEL DIN INSERT FOR CHASSIS PROFILE	3:19
UBFDB	BLANK FRONT PLATE FOR CHASSIS PROFILE	3:19
UALDR	DIN RAIL	3:23
UBDR	BRACKETS FOR DIN RAIL	3:23
UABDR	ADJUSTABLE BRACKETS FOR DIN RAIL	3:23
UDBDR	DIN RAIL WITH BRACKETS	3:23
UDABDR	DIN RAIL WITH ADJUSTABLE BRACKETS	3:23
UAMDB	ADJUSTABLE MOUNTING PLATE	3:25
UFMDB	FIXED TYPE MOUTING PLATE	3:25

Enclosure Type 2

The following items can be used for Enclosure Type 2 in addition to Enclosure Type 12 items

CAT. No.	DESCRIPTION	PAGE
UILC	LOUVRE COVERS	1:41
UCHM	CHIMNEY FOR ARC CONTAINMENT	1:67
UCCH	COVER FOR CHIMNEY TYPE A	1:67
UCHAB	CHIMNEY FOR ARC AONTAINMENT	1:67

Enclosure Type 1

The following items can be used for Enclosure Type 1 in addition to Enclosure Type 12 items and Enclosure Type 2 items

CAT. No.	DESCRIPTION	PAGE
UDW	DOOR WITH WINDOW	1:19
UDIL	DOOR INTERLOCK	1:31
UCSES	COVER SEAL SYSTEM	1:35
UFC	FLAT COVER	1:39
UEGP	EXTERNAL GLAND PLATE	1:63
USCWC	SCREWLESS COVER	1:37

Test Certificates

Elsteel Techno Module System are cerified as per IEC and UL standards by independent certification authorities.

Elsteel Techno Module System is fully type tested as per IEC 61439-1, IEC 61439-2 and IEC TR 61641 with the following brands.

Elsteel Techno Module System is certified for marine applications by

Stay updated with the latest tests and certifications on **www.elsteel.com**

© 1997-2024 ELSTEEL. All Right Reserved

Material & Paint Specifications

PAINT SPECIFICATIONS	
Type of paint	Epoxy polyester powder
Type of finish	Semi gloss/ Smooth finish
Coating thickness	≥ 60µm
To repaint	Slightly sand the surface to be painted and apply required colour. Please inform the paint supplier the above information.

Type of paint	Epoxy polyester powder
Type of finish	Texture finish/ Fine Texture Finish
Coating thickness	≥ 70µm
To repaint	Slightly sanding the surface to be painted and apply required colour. Please inform the paint supplier the above information.

COPPER SPECIFICATION
Electrolytic Copper high conductivity OC-ETP 99.98 % JIS H3140 C 1100 Tempered up to half hard.

Note: Please refer relevant file for material specifications.

PICTURE	DESCRIPTION	STANDARD NO.	SIZE	QTY	ORDER NO.
	GAS SPRING WITH REVERTS	N/A		01	05060
	BRACKET FOR DOOR STAY TOP & BOTTOM	N/A		01	05064
	ALLEN BOLT	DIN 912 8.8	M4 × 20	100	05105
		DIN 912 8.8	M6 × 8	100	05110
		DIN 912 8.8	M6 × 16	100	05115
		DIN 912 8.8	M6 × 20	100	05117
		DIN 912 8.8	M6 × 25	100	05119
		DIN 912 8.8	M6 × 30	100	05120
	ALLEN BOLT LOW HEAD	N/A	M6 × 16	100	05121
	ALLEN BOLT	DIN 912 8.8	M8 × 12	100	05130
		DIN 912 8.8	M8 × 16	100	05132
		DIN 912 8.8	M8 × 20	100	05134
		DIN 912 8.8	M8 × 25	100	05136
		DIN 912 8.8	M8 × 40	100	05139
		DIN 912 8.8	M10 × 20	100	05150
		DIN 912 8.8	M10 × 40	100	05152
	COUNTER SUNK FLAT HEAD SCREW	DIN 965A 4.8	M6 × 12	100	05170
		DIN 965A 4.8	M6 × 20	100	05173
		DIN 965A 4.8	M6 × 35	100	05179
	HEX. SOCKET COUNTER SUNK SCREW	DIN 7991 10.9	M8 × 16	100	05190
	COUNTER SUNK OVAL HEAD SCREW	DIN 966A 4.8	M6 × 16	100	05205
	BUTTON HEAD SCREW	ISO 7380-1	M6 × 8	100	05208
		ISO 7380-1	M6 × 10	100	05210
		ISO 7380-1	M6 × 20	100	05213
	PAN HEAD SELF TAPPING SCREW	DIN 7981 FORM F	ST 5.5 5.5 × 13	100	05220
	CHEESE HEAD SCREW	DIN 7985A 4.8	M5 × 10	100	05230
		DIN 7985A 4.8	M6 × 10	100	05232
		DIN 7985A 4.8	M6 × 12	100	05233
		DIN 7985A 4.8	M6 × 16	100	05234

© 1997-2024 ELSTEEL. All Right Reserved

PICTURE	DESCRIPTION	STANDARD NO.	SIZE	QTY	ORDER NO.
	POZIDRIVE TAPTITE SCREW	N/A	M6 × 12	100	05240
			M6 × 16	100	05243
	TAPTITE SCREW	DIN 7500 D	M6 × 12	100	05250
	HEXAGON BOLT	DIN 933 8.8	M6 × 14	100	05260
		DIN 933 8.8	M8 × 20	100	05268
		DIN 933 8.8	M8 × 30	100	05270
		DIN 933 8.8	M10 × 30	100	05280
		DIN 931 8.8	M10 × 35	100	05281
		DIN 931 8.8	M10 × 40	100	05282
		DIN 931 8.8	M10 × 45	100	05283
		DIN 931 8.8	M10 × 50	100	05284
		DIN 931 8.8	M10 × 60	100	05286
		DIN 931 8.8	M12 × 45	100	05290
	HEXAGON THIN NUT	DIN 439 B	M6 × 3	100	05300
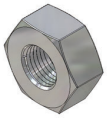	HEXAGON NUT	DIN 934 8	M6	100	05302
		DIN 934 8	M8	100	05304
		DIN 934 8	M10	100	05306
		DIN 934 8	M12	100	05308
	SPRING WASHER	DIN 127 B	M6	100	05320
		DIN 127 B	M8	100	05322
	FLAT WASHER	DIN 125 A	M6	100	05330
		DIN 125 A	M8	100	05332
		DIN 125 A	M10	100	05334
	CONICAL SPRING WASHER	DIN 6796	M10	100	05338
		DIN 6796	M12	100	05339
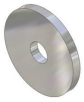	FLAT WASHER	DIN 7349	M10	100	05351
		BN 2045	M10	100	05353
		DIN 7349	M12	100	05355
	FENDER WASHER	DIN 9021	M6	100	05360
	RETAINER WASHER	N/A	M6	100	05362
	O RING	N/A	Ø6	100	05370
			Ø7	100	05371
			Ø12	100	05374

PICTURE	DESCRIPTION	SIZE	QTY	ORDER NO.
	RUBBER PLUG - RAL 9005	Ø13	01	05380
	PLASTIC PLUG - RAL 9005	Ø35	01	05394
	BASE FRAME BRACKET		01	05411
	CORNER BAR ANCHOR		01	05430
	CORNER BAR ANCHOR LIGHT		01	05432
	CORNER BAR WITH SCREWS	200	01	05434
	CORNER BAR WITH ANCHOR WITHOUT SCREWS	200	01	05435
	CORNER BAR WITH ANCHOR WITHOUT SCREWS	300	01	05436
	CORNER BAR WITH SCREWS	300	01	05437
	CORNER BAR WITH ANCHOR WITHOUT SCREWS	400	01	05438
	CORNER BAR WITH SCREWS	400	01	05439
	CORNER BAR WITH ANCHOR WITHOUT SCREWS	600	01	05441
	CORNER BAR WITH SCREWS	600	01	05442
	CORNER BAR WITH ANCHOR WITHOUT SCREWS	800	01	05444
	CORNER BAR WITH SCREWS	800	01	05445
	CORNER BAR WITH ANCHOR WITHOUT SCREWS	1000	01	05447
	CORNER BAR WITH SCREWS	1000	01	05448
	CORNER BAR WITH ANCHOR WITHOUT SCREWS	1200	01	05450
	CORNER BAR WITH SCREWS	1200	01	05451
	CORNER BAR WITH ANCHOR WITHOUT SCREWS	1400	01	05453
	CORNER BAR WITH SCREWS	1400	01	05454
	CORNER BAR WITH ANCHOR WITHOUT SCREWS	1600	01	05456
	CORNER BAR WITH SCREWS	1600	01	05457
	CORNER BAR WITH ANCHOR WITHOUT SCREWS	1800	01	05459
	CORNER BAR WITH SCREWS	1800	01	05460
	CORNER BAR WITH ANCHOR WITHOUT SCREWS	2000	01	05462
	CORNER BAR WITH SCREWS	2000	01	05463
	CORNER BAR WITH ANCHOR WITHOUT SCREWS	2200	01	05465
	CORNER BAR WITH SCREWS	2200	01	05466
	CROSS BAR PLASTIC INSERT		01	05515
	CROSS BAR ANCHOR		01	05518

© 1997-2024 ELSTEEL. All Right Reserved

PICTURE	DESCRIPTION	SIZE	QTY	ORDER NO.
	DOOR CAM RECEIVER V3		01	05729
	KEY FOR IEC LOCK - PLASTIC		01	05783
	KEY FOR IEC LOCK - STEEL		01	05902
	TRIANGULAR KEY 8mm		01	05784
	SQUARE KEY 6mm		01	05786
	DOOR INTERLOCK PLASTIC GUIDE		01	05794
	DOOR TOP HINGE V3		01	09050
	DOOR BOTTOM HINGE V3		01	09051
	DOOR CENTRE HINGE V3		01	09052
	DOOR CAM RECEIVER V3 (FOR T-HANDLE LOCK)		01	06310
	DOOR ROD CONTROLLER V3 (FOR T-HANDLE LOCK)		01	06365
	IEC LOCK HOLE COVER V3		01	06231

PICTURE	DESCRIPTION	SIZE	QTY	ORDER NO.
	IEC LOCK CAM V3 - STEEL		01	05726
	DOOR STEEL CAM V3 (FOR T-HANDLE LOCK V3)		01	05722
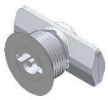	IEC LOCK COMPLETE V3 - STEEL		01	05899
	DOOR LOCK ROD V3 (FOR T-HANDLE LOCK)	800	01	05342
		1000	01	05343
		1200	01	05344
		1400	01	05345
		1600	01	05346
		1800	01	05347
		2000	01	05348
		2200	01	05349
	FLAT COVER STAINLESS STEEL WASHER	M6	01	05792
	FLAT COVER SPACER	M6	01	05801
	COVER FINISHING WASHER V3	M6	01	05805
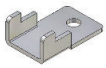	COVER SUPPORT BRACKET V3		01	05905
	COVER U BRACKET		01	05809
	COVER FIXING BRACKET V3		01	05904
	MOUNTING PLATE SPACER		01	05820

© 1997-2024 ELSTEEL. All Right Reserved

PICTURE	DESCRIPTION	SIZE	QTY	ORDER NO.
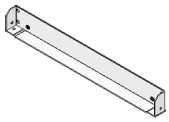	MOUNTING RAIL	400	01	05900
		600	01	05903
		800	01	05906
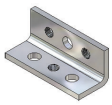	BRS 50 BRACKET		01	05935
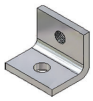	BRS 25 BRACKET		01	05938
	PAK BRACKET		01	05933
	L-PANEL CORNER RAL 7035 FTF		01	05943
	L-PANEL BASE PROFILE	200	01	05948
		400	01	05951
		600	01	05954
		800	01	05957
	L-PANEL TOP PROFILE	200	01	05960
		400	01	05963
		600	01	05966
		800	01	05969
	L-PANEL SCREW	M8	01	05972
	DOUBLE ADHESIVE TAPE	10	01 ROLL	05977
	COVER GASKET V3		01 METER	05978
	DOUBLE ADHESIVE TAPE	12 × 1.2	01 ROLL	05980
	DOOR GASKET V3		01 METER	05982
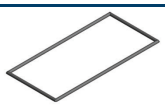	GLAND PLATE GASKET	139 × 48	01	05983
		216 × 86	01	05984
	IEC LOCK GASKET V3		01	05738

PICTURE	DESCRIPTION	SIZE	QTY	ORDER NO.
	BUSBAR NUT 4 mm	M10	100	05962
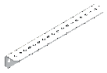	FIXING RAIL SET 90 mm (FOR UBH BUSBAR HOLDER)		01	06228
	FIXING RAIL SET 190 mm (FOR UBH BUSBAR HOLDER)		01	06078
	FIXING RAIL SET 190 mm (FOR OMNI BUSBAR HOLDER)		01	06069
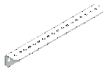	FIXING RAIL SET 390 mm (FOR UBH/OMNI BUSBAR HOLDER)		01	06068
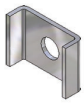	CLAMPING BRACKET	25	01	06076
		50	01	06079
	BOLT HOLDER NUT	M10	01	06082
	FISH PLATE WITH GROOVE - COPPER		01	06094
	FISH PLATE PLAIN - COPPER		01	06097
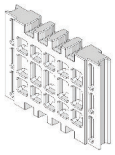	MAIN BUSBAR HOLDER		01	06103
	DIN RAIL	400	01	06156
		600	01	06159
	DIN SPACER	17.5	01	06165
		60	01	06168
	UBH SPACER CLIP		01	06170

© 1997-2024 ELSTEEL. All Right Reserved

PICTURE	DESCRIPTION	SIZE	QTY	ORDER NO.
	VERTICAL RAIL (FOR SUPER FLEX INSERT)	200	01	06210
		400	01	06213
		600	01	06216
		800	01	06219
		1000	01	06222
	LONGITUDINAL RAIL (FOR SUPER FLEX INSERT)	140	01	06230
		340	01	06233
	CLIP NUT	M6	100	06260
	POP RIVETS	3	100	06261
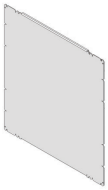	FTC MOUNTING PLATE	400×200	01	06422
		400×300	01	06423
		400×400	01	06424
		400×500	01	06425
		400×600	01	06426
		600×200	01	06402
		600×300	01	06404
		600×400	01	06403
		600×500	01	06405
		600×600	01	06406

PICTURE	DESCRIPTION	SIZE	QTY	ORDER NO.
	COMPONENT LABEL SHEET 8.5”× 11” (210mm×297mm)		10	06545
	REPAIR PAINT - RAL 9010		50ml	07003
	REPAIR PAINT - RAL 9005		50ml	07006
	REPAIR PANT - RAL 7035		50ml	07007
	LOCK TIGHT FOR GASKET FIXING		50ml	07010
	RED LACQUER SEAL		50ml	07011

© 1997-2024 ELSTEEL. All Right Reserved

MODULAR
ELSTEEL
ENCLOSURES

100% Danish
Technology

Møllevej 9 C · 2990 Nivå
Denmark
Tel +45 49 22 33 44
elsteel@elsteel.dk
www.elsteel.com

© 2004-2024 ELSTEEL. All Rights Reserved